Baffinland Iron Mines Corporation

Fresh Water Supply, Sewage, and Wastewater Management Plan

BAF-PH1-830-P16-0010

Rev 8

Prepared By: Allison Parker
Department: Environment
Title: Environmental Specialist
Date: March 31, 2021
Signature: Allison Parker

Approved By: Francois Gaudreau
Department: Operations
Title : General Manager
Date: March 31, 2021
Signature:

The information contained herein is proprietary Baffinland Iron Mines Corporation and is used solely for the purpose for which it is supplied. It shall not be disclosed in whole or in part, to any other party, without the express permission in writing by Baffinland Iron Mines Corporation.

Note: This is an UNCONTROLLED COPY. All staff members are responsible to ensure the latest revision is used.

DOCUMENT REVISION RECORD

Issue Date MM/DD/YY	Revision	Prepared By	Approved By	Issue Purpose
01/31/2014	2	JM	EM	Approved for Use (BAF-PH1-830-P16-0010)
03/19/2015	3	JM	EM	Approved for Use (BAF-PH1-830-P16-0010)
03/29/2016	4	AV	JM	Approved for Use (BAF-PH1-830-P16-0010)
03/29/2018	5	CD	GR	Approved for Use (BAF-PH1-830-P16-0010)
03/31/2019	6	CD/WB	FG	Approved for Use (BAF-PH1-830-P16-0010)
03/31/2020	7	CD	BM	Approved for Use
03/31/2021	8	AP	FG	Approved for use

Index of Major Changes/Modifications in Revision 8

Item No.	Description of Change	Relevant Section
1	Updated information for new water take locations	5.1.1.3
2	Added information about DusTreat product applied to ore stockpiles	8.2.1
3	Updated appendices	Appendices

The information contained herein is proprietary Baffinland Iron Mines Corporation and is used solely for the purpose for which it is supplied. It shall not be disclosed in whole or in part, to any other party, without the express permission in writing by Baffinland Iron Mines Corporation.

Note: This is an UNCONTROLLED COPY. All staff members are responsible to ensure the latest revision is used.

TABLE OF CONTENTS

1 INTRODUCTION 7

2 REGULATIONS, STANDARDS, AND CODES 8

3 CORPORATE POLICIES 9

4 ENVIRONMENTAL RESPONSIBILITIES 10

4.1 ROLES AND RESPONSIBILITIES 10

4.1.1 Chief Operations Officer (COO)/General Manager 10
4.1.2 Mine Operations Manager/Superintendent 10
4.1.3 Crushing Manager/Superintendent 10
4.1.4 Site Services Manager/Superintendent 10
4.1.5 Road Maintenance Manager/Superintendent 10
4.1.6 Environment (Sustainable Development) Department 11
4.1.7 All Departmental Supervisors 11
4.1.8 All Project Personnel 11

5 FRESH WATER 12

5.1 GENERAL MITIGATION MEASURES FOR WATER USE 12

5.1.1 WATER INTAKES 12

5.2 FRESH WATER SOURCES 13

5.3 FRESH WATER SYSTEM PROCESS DESCRIPTION 15

5.3.1 MILNE PORT 15
5.3.2 MINE SITE 16

6 SEWAGE TREATMENT 17

6.1 SEWAGE GENERATION RATE 17

6.2 SEWAGE DISCHARGE CRITERIA 17

6.3 TREATED WASTEWATER GENERATION AND DISCHARGE/OUTFALL LOCATIONS 18

6.4 SEWAGE TREATMENT PROCESS DESCRIPTION 20

6.4.1 MILNE PORT 20
6.4.2 MINE SITE 21

7 WASTEWATER MANAGEMENT – OILY WATER 23

7.1 OILY WATER TREATMENT DISCHARGE CRITERIA 23

7.2 OILY WATER/WASTEWATER POTENTIAL SOURCE LOCATIONS 24

The information contained herein is proprietary Baffinland Iron Mines Corporation and is used solely for the purpose for which it is supplied.
It shall not be disclosed in whole or in part, to any other party, without the express permission in writing by Baffinland Iron Mines Corporation.

Note: This is an UNCONTROLLED COPY. All staff members are responsible to ensure the latest revision is used.

7.3 OILY WATER/WASTEWATER TREATMENT PROCESS DESCRIPTION 25
7.3.1 MANAGEMENT OF OILY WATER AT MILNE PORT 25
7.3.2 MANAGEMENT OF OILY WATER AT THE MINE SITE 26
7.3.3 MANAGEMENT OF OILY WATER AT STEENSBY PORT 27

8 WASTEWATER MANAGEMENT – CONTACT WATER 28

8.1 DISCHARGE CRITERIA 28

8.2 CONTACT WATER FACILITY AND DISCHARGE LOCATIONS 29
8.2.1 MILNE PORT STOCKPILE SURFACE WATER MANAGEMENT PONDS 30
8.2.2 MINE SITE ORE CRUSHER PAD SURFACE WATER MANAGEMENT POND 30
8.2.3 MINE SITE RUN OF MINE STOCKPILE SURFACE WATER MANAGEMENT POND 31
8.2.4 MINE SITE WASTE ROCK STOCKPILE POND 31
8.2.5 STEENSBY PORT CONTACT WATER MANAGEMENT 32

9 LANDFILL 33

9.1 Discharge Criteria 33

9.2 Mine Site Landfill 33

10 OPERATIONS AND MAINTENANCE (O & M) 34

10.1 POTABLE WATER TREATMENT SYSTEM O & M PLAN 34
10.1.1 REGULAR MAINTENANCE SCHEDULE 34
10.1.2 MONITORING PLAN 34

10.2 MOBILE OILY WATER SEPARATOR (OWS) SYSTEM 35
10.2.1 SYSTEM OVERVIEW 35
10.2.2 OPERATION AND MAINTENANCE PLAN 36

10.3 OILY WATER TREATMENT PLANT (FOR VEHICLE WASH WATER) O & M PLAN 36
10.3.1 REGULAR MAINTENANCE AND MONITORING SCHEDULE 36

11 CONTINGENCY MEASURES 38

12 MONITORING 40

12.1 POTABLE WATER SYSTEM MONITORING 40

12.2 SEWAGE TREATMENT SYSTEM MONITORING 40

12.3 OILY WATER TREATMENT SYSTEM MONITORING 40

12.4 TRAINING AND AWARENESS 41

12.5 COMMUNICATION 41

12.6 EXTERNAL COMMUNICATIONS 42

The information contained herein is proprietary Baffinland Iron Mines Corporation and is used solely for the purpose for which it is supplied.
It shall not be disclosed in whole or in part, to any other party, without the express permission in writing by Baffinland Iron Mines Corporation.

Note: This is an UNCONTROLLED COPY. All staff members are responsible to ensure the latest revision is used.

List of Tables

Table 2-1: Applicable Regulations, Standards, and Codes 8
Table 5-1: Water Use for Domestic and Industrial Purposes during the Construction AND OPERATION Phases* 13
Table 5-2: Water Use Locations Authorized For Dust Suppression* 14
Table 6-1: STP Average Sewage Flow Design Basis 17
TABLE 6-2: Effluent discharge quality limits for Sewage Treatment Facilities to Freshwater and to the Ocean* 17
Table 6-3: Treated Effluent Generation and Discharge/Outfall Locations* 18
Table 7-1: Effluent Discharge Quality Limits for Oily Water Treatment Facilities* 23
Table 7-2: Effluent Discharge Quality Limits for the Bulk Fuel Storage Facilities* 24
Table 7-3: Effluent Discharge Quality Limits for the Landfarm Facilities* 24
Table 8-1: Effluent Discharge Quality Limits for OPen Pit, Stockpiles, and Surface water management Ponds (NWB)* 28
Table 8-2: Effluent Discharge Quality Limits for OPen Pit, Stockpiles, and Surface water management Ponds (ECCC)* 29
Table 8-1: Effluent Discharge Quality Limits for the 33
Table 10-1: Recommended Maintenance Schedule - Potable Treatment Plants 34
Table 10-2: Maintenance Activities, Locations and Their Recommended Frequencies 36
Table 10-3: Monitoring Tasks, Locations and Frequencies 37

List of Figures

Figure 10-10-1 – Mobile OWS Flow Process Diagram 35
Figure 11-1 - Emergency spill reponse levels 38

The information contained herein is proprietary Baffinland Iron Mines Corporation and is used solely for the purpose for which it is supplied.
It shall not be disclosed in whole or in part, to any other party, without the express permission in writing by Baffinland Iron Mines Corporation.

Note: This is an UNCONTROLLED COPY. All staff members are responsible to ensure the latest revision is used.

List of Appendices

Appendix A - Sustainable Development Policy, and Health, Safety and Environment Policy

Appendix B - Table of Concordance with Type A Water Licence (2AM-MRY1325 - Amendment No. 1) Terms and Conditions

Appendix C - Site Layout (Mine Site and Port Site)

Appendix D - Block Flow Diagrams – Milne Port and Mine Site

Appendix E - Sewage Treatment Plant O & M Manual

Appendix F - Steensby and Rail Camps Freshwater Supply, Sewage and Wastewater – Plans for Future Work

Appendix G - Polishing Waste Stabilization Ponds (PWSP) Effluent Discharge Plan

Appendix H - Mobile Oily Water Separator (OWS) Manual

Appendix I - Oily Water Treatment Plant (For Vehicle Wash Water) O & M Manuals

Appendix J - BAF-PHl-340-PRO-048 – Waste Pond Water Treatment Plant Operations

Appendix K - BAF-PH1-830-P16-0047– Metal and Diamond Mining Effluent Regulations Emergency Response Plan

The information contained herein is proprietary Baffinland Iron Mines Corporation and is used solely for the purpose for which it is supplied.
It shall not be disclosed in whole or in part, to any other party, without the express permission in writing by Baffinland Iron Mines Corporation.

Note: This is an UNCONTROLLED COPY. All staff members are responsible to ensure the latest revision is used.

1 INTRODUCTION

This document describes the plan to manage the fresh water supply and wastewater for the various camp sites for the Mary River Project during the Project's construction and operation phases. Specifically, this document focuses on freshwater supply and wastewater treatment and disposal at Milne Port, the Mine Site, Steensby Port, and various temporary camps.

The Fresh Water Supply, Sewage, and Wastewater Management Plan is an update to the existing plan and supersedes the BAF-PH1-830-P16-0010, Revision 7, dated March 2020. This Plan will continue to support the Membrane Biological Reactor (MBR) sewage treatment plants (STPs) installed in 2014 which service the Mine Site Complex (MSC) and Port Site Complex (PSC) camps, the MBR sewage treatment plant installed in 2018 to service the Sailiivik Camp, the MBR sewage treatment plant installed in 2019 to service the 380 Person Camp and the potable water supply and oily water treatment activities under the Type A Water Licence 2AM-MRY1325 – Amendment No. 1 (Type A Water Licence). This Plan will also support future upgrades and additions to the MBR STPs necessary to service future MSC, PSC and Sailiivik camp expansions at the Mary River Mine Site and Milne Port.

This Plan should be used in conjunction with the Surface Water and Aquatic Ecosystem Management Plan (SWAEMP)[1](BAF-PH1-830-P16-0026), Aquatic Effects Monitoring Plan (AEMP)[2] (BAF-PH1-830-P16-0039) and the Sampling Program – Quality Assurance and Quality Control (QA/QC) Plan[3] (BAF-PH1-830-P16-0001).

[1] Baffinland Iron Mines Corporation. Mary River Project –Surface Water and Aquatic Ecosystem Management Plan, Rev. 6. March 2020.
[2] Baffinland Iron Mines Corporation. Mary River Project – Aquatic Effects Monitoring Plan, Rev. 2. April 2016.
[3] Baffinland Iron Mines Corporation, Mary River Project - Sampling Program – Quality Assurance and Quality Control (QA/QC) Rev. 3, March 2020.

The information contained herein is proprietary Baffinland Iron Mines Corporation and is used solely for the purpose for which it is supplied. It shall not be disclosed in whole or in part, to any other party, without the express permission in writing by Baffinland Iron Mines Corporation.

Note: This is an UNCONTROLLED COPY. All staff members are responsible to ensure the latest revision is used.

2 REGULATIONS, STANDARDS, AND CODES

This Plan has been developed under the requirements of Baffinland's Type A Water Licence (refer to the concordance table for the Type A Water Licence presented in Appendix B). Furthermore, all actions undertaken under this Plan will be compliant with the appropriate sections of both Federal and Territorial legislation as indicated in Table 2-1.

TABLE 2-1: APPLICABLE REGULATIONS, STANDARDS, AND CODES

TITLE	NUMBER/ACRONYM
American Water Works Association	AWWA
International Building Codes	IBC
National Sanitation Foundation	NSF
Health Canada Guidelines for Canadian Drinking Water Quality	GCDWQ
Northwest Territories Water Supply System Regulations	NWT Regulation 108-2009
Safe Drinking Water Act, 2002	Ontario Regulation 170/03
Nunavut Waters and Nunavut Surface Rights Tribunal Act, SC2 002, c. 10	--
Northwest Territories Water Act	NWTWA
Northwest Territories Water Regulations (SOR/93-303)	--
Ontario Drinking Water Quality Standards	--
Federal *Fisheries Act*	--
Canadian Environmental Protection Act (1999)	CEPA
CCME Water Quality Guidelines for the Protection of Aquatic Life	--
Ontario Guidelines for Sewage Works, 2008	--
Drinking Water System Components	NSF/ANSI Standard 61
Filtering Material	AWWA Standard B100
Granular Activated Carbon	AWWA Standard B604
Canada Occupational Health and Safety Regulations	OSH
Metal and Diamond Mining Effluent Regulations	MDMER
End-of-pipe Fish Protection Screens for Small Water Intakes in Freshwater	DFO Canada Interim Code of Practice (2020)
Framework for Assessing the Ecological Flow Requirements to Support Fisheries in Canada	Canadian Science Advisory Secretariat Science Advisory Report 2013/17
DFO Protocol for Winter Water Withdrawal from Ice-covered Waterbodies in the Northwest Territories and Nunavut	DFO (2010)

The information contained herein is proprietary Baffinland Iron Mines Corporation and is used solely for the purpose for which it is supplied.
It shall not be disclosed in whole or in part, to any other party, without the express permission in writing by Baffinland Iron Mines Corporation.

Note: This is an UNCONTROLLED COPY. All staff members are responsible to ensure the latest revision is used.

3 CORPORATE POLICIES

Baffinland's Sustainable Development Policy identifies Baffinland's commitment internally and to the public to operate in a manner that is environmentally responsible, safe, fiscally responsible and respectful of the cultural values and legal rights of Inuit. The Sustainable Development Policy is provided in Appendix A.

Baffinland's Health, Safety and Environment Policy is the company's commitment to achieve a safe, health and environmentally responsible workplace. The policy is provided in Appendix A.

All employees and contractors are expected to comply with the contents of both above mentioned policies.

The information contained herein is proprietary Baffinland Iron Mines Corporation and is used solely for the purpose for which it is supplied.
It shall not be disclosed in whole or in part, to any other party, without the express permission in writing by Baffinland Iron Mines Corporation.

Note: This is an UNCONTROLLED COPY. All staff members are responsible to ensure the latest revision is used.

4 ENVIRONMENTAL RESPONSIBILITIES

4.1 ROLES AND RESPONSIBILITIES

Responsibilities for the management and monitoring of surface water flows, potable water systems and effluents at the Project are as follows:

4.1.1 Chief Operations Officer (COO)/General Manager

- Reports to the Chief Executive Officer
- Responsible for providing oversight for all Project operations and allocating the necessary resources for the operation, maintenance and management of Project infrastructure.

4.1.2 Mine Operations Manager/Superintendent

- Reports to the COO/General Manager
- Provides oversight for all Deposit No. 1 mining operations, including the operation, construction and maintenance of water and waste management infrastructure at Deposit No. 1 mining areas, ROM stockpile, Waste Rock Facility and along the Mine Haul Road, including culverts, ditches, surface water management ponds and associated water treatment systems.

4.1.3 Crushing Manager/Superintendent

- Reports to the COO/General Manager
- Provides oversight for all ore crushing operations, including the operation, construction and maintenance of surface water management infrastructure at the Mine Site Crusher Facility, including culverts, ditches, surface water management ponds and any associated water treatment systems.

4.1.4 Site Services Manager/Superintendent

- Reports to the COO/General Manager
- Provides oversight for all Site Services operations, including the operation, construction and maintenance of water and waste management infrastructure and treatment systems at the Mine Site and Milne Port.
- Responsible for managing water retained in containment areas associated with Project bulk fuel facilities and hazardous materials/waste storage areas, including landfarm facilities.

4.1.5 Road Maintenance Manager/Superintendent

- Reports to the COO/General Manager
- Provides oversight for all Road Maintenance operations, including the operation, construction and maintenance of surface water management infrastructure for the Tote Road that runs between Milne Port and the Mine Site, including culverts, bridges, ditches and swales.

The information contained herein is proprietary Baffinland Iron Mines Corporation and is used solely for the purpose for which it is supplied.
It shall not be disclosed in whole or in part, to any other party, without the express permission in writing by Baffinland Iron Mines Corporation.

Note: This is an UNCONTROLLED COPY. All staff members are responsible to ensure the latest revision is used.

4.1.6 Environment (Sustainable Development) Department

- Support the management of the Project's surface water management infrastructure by advising operational departments and obtaining the appropriate regulatory approvals for necessary changes and modifications.
- Advise operational departments on the implementation of the appropriate controls to manage surface water flows and effluents at the Project, including the implementation of sedimentation and erosion controls.
- Report incidents to senior management and the appropriate regulatory agencies and stakeholders.
- Conduct inspections and monitoring to ensure compliance with applicable regulations and commitments.
- Provide training sessions to operational departments on the appropriate mitigation measures and strategies for managing surface water flows and effluents at the Project.

4.1.7 All Departmental Supervisors

- Reports to the Departmental Manager/Superintendent
- Responsible for reading and understanding applicable sections of this Plan and directing departmental personnel on the appropriate mitigation measures and strategies for managing surface water flows and effluents in their Project area.

4.1.8 All Project Personnel

All personnel Project personnel are responsible for complying with the requirements of this Plan in the management of surface water flows and effluents at the Project.

The information contained herein is proprietary Baffinland Iron Mines Corporation and is used solely for the purpose for which it is supplied.
It shall not be disclosed in whole or in part, to any other party, without the express permission in writing by Baffinland Iron Mines Corporation.

Note: This is an UNCONTROLLED COPY. All staff members are responsible to ensure the latest revision is used.

5 FRESH WATER

5.1 GENERAL MITIGATION MEASURES FOR WATER USE

5.1.1 WATER INTAKES

5.1.1.1 ENGINEERING INTAKE STRUCTURES

Engineered intake structures are designed to minimize erosion, avoid sediment issues, and provide protection from ice and peak water flows. Care is taken to ensure that disturbance to aquatic environments is minimized during installation and maintenance of infrastructure. Riprap used in construction is clean, free of fine sediment, non-acid leaching, and non-metal generating.

5.1.1.2 SCREENS ON INTAKE PIPES

All water intake hoses shall be equipped with a screen of an appropriate mesh size, in accordance with the Fisheries and Oceans (DFO) Canada Interim Code of Practice: *End-of-pipe fish protection screens for small water intakes in freshwater* (2020) to ensure no entrainment of fish. The guideline also requires a water withdraw rate such that fish do not become impinged on the screen.

5.1.1.3 SELECTION OF NEW WATER TAKE LOCATIONS

New water intake locations maybe required for a variety of needs including concrete production, drilling, and dust suppression, etc. A screening process is used to confirm whether water sources are considered adequate as water take locations. Source selection begins by looking for the largest possible water body that is feasible for use. Lakes are considered first, followed by ponds and then large rivers. Streams and creeks will not be considered for short-term water withdrawal unless larger sources are not available. Baffinland will notify the Inspector and the Board at least 10 days in advance of using any new water sources not identified in the Type A Water Licence. If the required volume of water is likely to result in drawdown of the source water body, an assessment of the proposed water withdrawal will accompany the notification to the Inspector and the Board. For water takes from fish-bearing streams during open water, DFO (2013) recommends water withdrawals not exceed 10% of the instantaneous flow without further study. During winter, water withdrawals from lakes should not exceed 10% of the under-ice volume without further study (DFO, 2010). During winter under ice conditions, water must be drawn from below two metres (2 m) of non-frozen water (as the top two metres (2 m) of water provides higher oxygenation for resident fish).

5.1.1.4 WATER TRUCK WATER WITHDRAWALS

Water trucks withdraw water from Km 32 Lake to supply Milne Port, and from Camp Lake to supply the Mine Site for domestic and industrial (i.e. production drills, emulsion plant, maintenance facilities, etc.) water needs. A number of water sources are relied upon for use in dust control. Intakes on the extraction hoses are screened in accordance with the DFO guideline. Water withdrawals are short-term (approximately 20 minutes to fill a water truck) and the approved and proposed water withdrawals are based on guidance established by Knight Piésold (2014).

The information contained herein is proprietary Baffinland Iron Mines Corporation and is used solely for the purpose for which it is supplied.
It shall not be disclosed in whole or in part, to any other party, without the express permission in writing by Baffinland Iron Mines Corporation.

Note: This is an UNCONTROLLED COPY. All staff members are responsible to ensure the latest revision is used.

5.1.1.5 WATER USAGE AND CONSERVATION MEASURES

Water meters are installed at strategic locations to monitor water consumption and enable the development of management strategies to reduce water usage/consumption. These strategies include the installation of low flow water taps. If water meters aren't available, water use will be estimated using flow rates.

Water withdrawn from approved water intake locations within the Project is recorded and reported to the Environment Department. All personnel involved with water use activities are to follow the Type A Water Licence to ensure that daily withdrawal limits are not exceeded. Controls that may be implemented to ensure daily limits are not exceeded include water meters, source location and limit signage, ongoing training of involved personnel in water taking, detailed water truck logs and effective communication between day shift and night shift operators.

5.2 FRESH WATER SOURCES

All fresh water for domestic camp use and industrial purposes, during Construction and Operation Phases of the Project shall be obtained in amount and from sources listed in Table 5-1. Domestic water use is for camp operations, and industrial uses are primarily for firewater and other industrial uses (e.g. concrete production).

TABLE 5-1: WATER USE FOR DOMESTIC AND INDUSTRIAL PURPOSES DURING THE CONSTRUCTION AND OPERATION PHASES*

Site	Source	Construction Phase	Operation Phase		
		Volume (m^3/day)	Domestic	Industrial	Combined
			Volume (m^3/day)		
Milne Port (Milne Inlet)	Phillips Creek (summer) Km 32 Lake (Winter)	367.5	300	67.5	367.5
Mine Site (Mary River)	Camp Lake	657.5	203.8	151.6	355.4
Steensby Port (Steensby Inlet)	ST 347 Km Lake 3 Km Lake	435.8	101	142.6	243.6
Raven River	Camp Lake	145.2	N/A	N/A	N/A
Mid-Rail	Nivek Lake (Summer) Ravn Camp Lake (Winter)	79.5	N/A	N/A	N/A

The information contained herein is proprietary Baffinland Iron Mines Corporation and is used solely for the purpose for which it is supplied.
It shall not be disclosed in whole or in part, to any other party, without the express permission in writing by Baffinland Iron Mines Corporation.

Note: This is an UNCONTROLLED COPY. All staff members are responsible to ensure the latest revision is used.

Cockburn North (Tunnels Camp)	Cockburn Lake	101.4	N/A	N/A	N/A
Cockburn South Camp	Cockburn Lake	111.1	N/A	N/A	N/A
TOTAL		**1,898**	**604.8**	**361.7**	**966.5**

*Source: Type A Water Licence (2AM-MRY1325 – Amendment No. 1).

Table 5-2 outlines approved water sources under the Type A Water Licence for dust suppression. Table 5-2 includes approved water sources which are smaller streams. Water can be extracted from these streams during June and July in any year, with the exception of dry years where water withdrawals are prohibited during August and September. The Environment Department will be consulted before withdrawing water from these streams listed in Table 5-2 to verify if it is a wet or dry year and if water withdrawals are authorized.

TABLE 5-2: WATER USE LOCATIONS AUTHORIZED FOR DUST SUPPRESSION*

Site	Source	Proposed Maximum Volume (m3/day)	Restriction
Tote Road	Phillip's Creek	212	None
	Km 32 Lake	364	
	CV128	579.5	
	CV099	110	June – July only during low flow (less than mean flow) years
	CV087	90	
	CV078	75	
	Katiktok Lake	318	None
	BG50	150	
	BG32	120	June – July only during low flow (less than mean flow) years
	CV217	130	None
	Muriel Lake	212	
	David Lake	132	June – July only during low flow (less than mean flow) years
	BG17	75	
	CV233 (Tom River)	135	None
	Camp Lake	86	

*Source: Type 'A' Water Licence (2AM-MRY1325 – Amendment No. 1)

The above water sources have been approved by the Nunavut Water Board (NWB) as freshwater sources for dust suppression. Authorization by the NWB in writing must be obtained prior to withdrawing water at the sources listed above for any purpose other than dust suppression. Streams will not be used as a water source unless authorized and approved by the NWB in writing. Additionally, no material shall be removed from below the Ordinary High Water Mark (HWM) of any water body unless authorized. For remote fresh water requirements such as dust suppression, tunnelling, and geotechnical and exploration drilling, some water may be drawn by truck from nearby lakes and ponds and used directly for these purposes if the source is pre-approved by Baffinland's Type A Water Licence or by application to the NWB.

The information contained herein is proprietary Baffinland Iron Mines Corporation and is used solely for the purpose for which it is supplied.
It shall not be disclosed in whole or in part, to any other party, without the express permission in writing by Baffinland Iron Mines Corporation.

Note: This is an UNCONTROLLED COPY. All staff members are responsible to ensure the latest revision is used.

Sources that are restricted by low flow years will have a visual inspection completed by environmental personnel to determine if restrictions need to be put in place on a regular basis. Environment personnel will then perform instantaneous flow measurement by staff gauge monitoring if deemed necessary. The instantaneous flow estimate will be done by measuring the height of water on a staff gauge and applying it to rating curves of representative streams around the Project. This data will be compared to low flow indices from current monitoring locations for a representative stream in consultation with a hydrologist to determine if it is a low flow year. The Environment Department will inform operators of any restrictions.

Water used for the purposes of exploration drilling and domestic camp use at supporting satellite exploration camps will be withdrawn under the authorization of Baffinland's Exploration Type B Water Licence (Type B Water Licence; 2BE-MRY1421). Water withdrawn for domestic camp use at satellite exploration camps will be withdrawn from sources proximal to each camp. Total water use for all satellite exploration camps will not exceed 49 m^3 per day. Likewise, drill water will be withdrawn from water source(s) proximal to drilling targets and shall not exceed 250 m^3 per day. Therefore, the volume of water withdrawn for all purposes under the Type B Water Licence will not exceed 299 m^3 per day.

5.3 FRESH WATER SYSTEM PROCESS DESCRIPTION

The following sections describe the fresh water systems at the Project sites. Each site also includes a potable water treatment system which produces drinking water for the personnel at the site during construction and operation phases. These systems treat water to meet the Guidelines for Canadian Drinking Water Quality (Health Canada, 2017) as well as the Ontario Drinking Water Quality Standards (Government of Ontario, 2018a). Minimum process equipment requirements are based upon the Northwest Territories Water Supply System Regulations, NWT Regulation 108-2009, Ontario Design Guidelines for Drinking Water Systems 2008, Ontario Regulation 170/03 – Drinking Water Systems, the Procedure for Disinfection of Drinking Water in Ontario, as well as best management practices.

5.3.1 MILNE PORT

Currently on site at Milne Port there are two (2) camps that support operations and construction activities. These camps include the Port Site Complex (PSC) Camp and the 380-Person Camp. Each camp contains a Potable Water Treatment Plant (PWTP) within or near the camp as well as freshwater tanks to store raw water being delivered. The freshwater demand for construction and operation are shown on drawing 'Milne Inlet – Water Supply Balance Block Flow Diagram' in Appendix D of this Plan.

A raw water truck draws water from either Km 32 Lake (in winter/summer) or Phillips Creek (in summer) and delivers the water to a water storage tank near the camp. Water from this tank is used to provide fire water as well as meet the fresh water requirements of the site. A stand pipe within the tank ensures that fire water is always available in the tank. The Milne Port camp layout, including the locations of potable water related infrastructure, is presented in Appendix C. The potable water treatment scheme consists of coagulation followed by media filtration and disinfection by ultraviolet radiation. The water then undergoes a secondary disinfection by sodium hypochlorite injection to ensure residual chlorine content at the point of use.

The information contained herein is proprietary Baffinland Iron Mines Corporation and is used solely for the purpose for which it is supplied.
It shall not be disclosed in whole or in part, to any other party, without the express permission in writing by Baffinland Iron Mines Corporation.

Note: This is an UNCONTROLLED COPY. All staff members are responsible to ensure the latest revision is used.

5.3.2 MINE SITE

Currently on site at the Mine Site there are three (3) camps that support construction, operations and site wide exploration activities. These camps include the Mine Site Weatherhaven (MWH) Camp, the Sailiivik Camp Complex, and the Mine Site Complex (MSC) Camp. Each camp contains a PWTP within or near the camp as well as freshwater tanks to store raw water being delivered. The freshwater demand for construction and operation are shown on the drawing 'Mine Site – Water Supply Balance Block Flow Diagram' in Appendix D of this Plan.

Fresh water supply for the Mine Site is obtained using an electric pump positioned inside a heated and insulated pump house on a raw water jetty on Camp Lake. Water is pumped directly from the lake source to water storage tanks located at both camps. Storage tanks that are not connected to this water line are filled from water trucks that draft water directly from the pump house. Water from these tanks will be used to provide fire water as well as meet the fresh water requirements of the site. A stand pipe within each tank ensures that fire water is always available in the tank. The Mine Site camp layout, including locations of potable water related infrastructure, is presented in Appendix C of this Plan.

The potable water treatment scheme consists of coagulation followed by media filtration and disinfection by ultraviolet radiation. The water will then undergo a secondary disinfection by sodium hypochlorite injection to ensure residual chlorine content at the point of use.

Some fresh water requirements such as road dust suppression, exploration drilling, quarry dust suppression, and concrete and explosives manufacturing will be provided directly from Camp Lake and other nearby lakes using water trucks. Exploration drilling will continue throughout the construction and operation phases of the Project.

The information contained herein is proprietary Baffinland Iron Mines Corporation and is used solely for the purpose for which it is supplied.
It shall not be disclosed in whole or in part, to any other party, without the express permission in writing by Baffinland Iron Mines Corporation.

Note: This is an UNCONTROLLED COPY. All staff members are responsible to ensure the latest revision is used.

6 SEWAGE TREATMENT

6.1 SEWAGE GENERATION RATE

The estimated generation of sewage is based upon a per capita generation as shown in Table 6-1.

TABLE 6-1: STP AVERAGE SEWAGE FLOW DESIGN BASIS

Parameter	Design Value	Source
Sewage Generation per Capita	300 L/person/day	Design Basis – Sewage Treatment Plant, Doc. No. H337697-4000-10-109-0002 (FEIS, Appendix 3B).

6.2 SEWAGE DISCHARGE CRITERIA

All sewage generated from relevant Project sites is directed to the Sewage Treatment Facilities or as otherwise approved by the NWB. As per the Type A Water Licence, Baffinland constructs and operates infrastructure and facilities designed to contain, withhold, divert, or retain Water and/or Waste in accordance with applicable legislation and industry standards. Effluent is discharged such that surface erosion is minimized and no additional impacts are created. Effluent discharge locations are regularly monitored for erosion and control measures are implemented as required. The quality of the sewage treatment plant effluent discharging to freshwater or directly into the ocean shall be in accordance with the applicable site discharge limits and the approved Type A Water Licence as listed in Table 6-2.

TABLE 6-2: EFFLUENT DISCHARGE QUALITY LIMITS FOR SEWAGE TREATMENT FACILITIES TO FRESHWATER AND TO THE OCEAN*

Parameter	Unit	Maximum Concentration of Any Grab Sample discharging into Freshwater (mg/L)	Maximum Concentration of any Grab Sample discharging into the Ocean (mg/L)
		Monitoring Locations: MS-01, MS-01B, MS-01A, MS-MRY-04, MS-MRY-04A, MS-MRY-04B, MS-MRY-04C	Monitoring Locations: MP-01, MP-01A, MP-01B
BOD_5	mg/L	30	100
TSS	mg/L	35	120
Faecal Coliform	CFU/100 mL	1,000 CFU /100 ml	10,000 CFU /100 ml
Oil and Grease*	mg/L	No visible sheen	No visible sheen
pH	---	Between 6.0 and 9.5	Between 6.0 and 9.5
Ammonia (NH3-N)	mg/L	4.0	-
Total Phosphorus (MS-01, MS-01B, MS-MRY-04A)	mg/L	4.0	-

The information contained herein is proprietary Baffinland Iron Mines Corporation and is used solely for the purpose for which it is supplied.
It shall not be disclosed in whole or in part, to any other party, without the express permission in writing by Baffinland Iron Mines Corporation.

Note: This is an UNCONTROLLED COPY. All staff members are responsible to ensure the latest revision is used.

Parameter	Unit	Maximum Concentration of Any Grab Sample discharging into Freshwater (mg/L)	Maximum Concentration of any Grab Sample discharging into the Ocean (mg/L)
		Monitoring Locations: MS-01, MS-01B, MS-01A, MS-MRY-04, MS-MRY-04A, MS-MRY-04B, MS-MRY-04C	Monitoring Locations: MP-01, MP-01A, MP-01B
Total Phosphorus (MS-01A)	mg/L	1.0	-
Toxicity	---	Final effluent not acutely toxic	Final effluent not acutely toxic

*Source: Type A Water Licence (2AM-MRY1325 - Amendment No. 1) Table 4 and 5.

Locations MP-01 and MP-01A discharge directly into the ocean, therefore ocean discharge criteria apply.

Recycled water and use of reclaimed water from the various Treatment Facilities (STPs, OWSs, etc.), surface water management ponds, and embankment dams and approved discharge locations may be used if waters meet appropriate discharge criteria for those facilities. Sludge generated from Sewage Treatment Facilities or any other facilities shall be incinerated using the Milne Port and Mine Site on-site incinerators, disposed of in the landfill with the appropriate approvals from authorities, or backhauled for disposal off site in Southern Canada.

6.3 TREATED WASTEWATER GENERATION AND DISCHARGE/OUTFALL LOCATIONS

Treated sewage and wastewater for the Project is discharged to the locations listed in Table 6-3:

TABLE 6-3: TREATED EFFLUENT GENERATION AND DISCHARGE/OUTFALL LOCATIONS*

Camp/Site	Discharge/Outfall Location		Coordinates (UTM)	
	Summer	Winter	Easting	Northing
Milne Port	Ocean at Milne Inlet		503636	7976338
Mine Site	Sheardown Lake for Exploration Camp	Storage Ponds (PWSPs)	559733	7913630
	Effluent Line to Mary River		562321	7911946
Tote Road Work Sites	Conveyed to Mine Site or Milne Port Sewage Treatment Facilities		N/A	N/A

The information contained herein is proprietary Baffinland Iron Mines Corporation and is used solely for the purpose for which it is supplied.
It shall not be disclosed in whole or in part, to any other party, without the express permission in writing by Baffinland Iron Mines Corporation.

Note: This is an UNCONTROLLED COPY. All staff members are responsible to ensure the latest revision is used.

Camp/Site	Discharge/Outfall Location		Coordinates (UTM)	
	Summer	Winter	Easting	Northing
Steensby (Port)**	Ocean at Steensby Inlet		593378	7801412
Ravn River Area**	Conveyed to Mine Site Sewage Treatment Facilities		N/A	N/A
Mid-Rail Area**	Conveyed to Mine Site Sewage Treatment Facilities		N/A	N/A
Cockburn Tunnels Area**	Conveyed to Steensby Sewage Treatment Facilities		N/A	N/A
Cockburn South Camp**	Conveyed to Steensby Sewage Treatment Facilities		N/A	N/A

*Refer to Site Block Flow Diagrams in Appendix D for Milne Port and Mine Site anticipated annual effluent discharge.
** These sites are part of the Southern Railway Corridor and are not expected to be active in the foreseeable future.

Treated wastewater effluent will be discharged at a distance of least thirty-one metres (31 m) above the Ordinary HWM of any water body or watercourse, or where direct flow into the adjacent water body or watercourse is possible, so that surface erosion is minimized and additional impacts are avoided.

The sewage treatment facilities are sampled at the locations listed in Table 6-4.

TABLE 6-4 SEWAGE TREATMENT FACILITY MONITORING LOCATIONS

Camp/Site	Treatment Facility	Description	Coordinates (UTM)	
			Easting	Northing
Mine Site	MS-01	MSC Wastewater Treatment Plant	561322	7913257
Mine Site	MS-01A	Polishing Water Stabilizing Ponds	Not Constructed	Not Constructed
Mine Site	MS-01B	Sailivik Camp Wastewater Treatment Plant	560798	7913291
Mine Site	MS-MRY-04	Exploration Camp Wastewater Treatment Plant	558141	7914427

The information contained herein is proprietary Baffinland Iron Mines Corporation and is used solely for the purpose for which it is supplied.
It shall not be disclosed in whole or in part, to any other party, without the express permission in writing by Baffinland Iron Mines Corporation.

Note: This is an UNCONTROLLED COPY. All staff members are responsible to ensure the latest revision is used.

Mine Site	MS-MRY-04A	Polishing Water Stabilizing Ponds	558528	7914112
Mine Site	MS-MRY-04B	Polishing Water Stabilizing Ponds	558447	7914275
Mine Site	MS-MRY-04C	Polishing Water Stabilizing Ponds	558496	7914244
Milne Port	MP-01	PSC Wastewater Treatment Plant	503209	7976485
Milne Port	MP-01A	Polishing Water Stabilizing Ponds	503625	7976015
Milne Port	MP-01B	380 Man Camp Wastewater Treatment Plant	503808	7975985
Steensby Port	SP-01	N/A	Not Constructed	Not Constructed
Steensby Port	SP-01A	N/A	Not Constructed	Not Constructed

6.4 SEWAGE TREATMENT PROCESS DESCRIPTION

The process description for the sewage treatment systems at each site are described in the sections that follow. Note that for design purposes a per capita sewage generation rate of 344 L/person/day had been considered originally, which is higher than the per capita potable water consumption rate of 300 L/person/day. This was to ensure that the sewage treatment systems would have a higher design allowance. For consistency 300 L/person/day will now be used for both potable water consumption and sewage generation. On average sewage generated per person ranges from approximately 100 to 300 litres per day. In addition, actual camp occupancy can be optimized based on potable water conservation measures that can be implemented to reduce per capita water consumption and reduce overall sewage generation from current rates.

6.4.1 MILNE PORT

The original on-site STP for Milne Port is a MBR facility that was installed in 2014. Raw sewage generated at the PSC camp is pumped directly via lift stations and sewage lines to the MBR facility at Milne Port. A second STP is adjacent to the 380-Person Camp.

Treated effluent from the MBR sewage treatment plant servicing the PSC accommodations is stored in a series of treated effluent tanks. It is designed such that the effluent tank will be at a low-level during operation. This design allows for delay of discharge should sampling indicate that the effluent quality does not meet the applicable criteria. Such delay allows the effluent to be mixed, re-treated, and retested before discharge. Once sampling indicates that effluent meets discharge criteria the treated effluent stream is directed to discharge via truck or pipeline to the ocean outfall discharge location (see Table 6-3 for coordinates). The discharge location at Milne Inlet is shown on the Milne Port Site Layout (Appendix C).

The information contained herein is proprietary Baffinland Iron Mines Corporation and is used solely for the purpose for which it is supplied.
It shall not be disclosed in whole or in part, to any other party, without the express permission in writing by Baffinland Iron Mines Corporation.

Note: This is an UNCONTROLLED COPY. All staff members are responsible to ensure the latest revision is used.

Should discharge of off-spec effluent be necessary from the treated effluent tanks due to volume, the off-spec effluent will be stored in the Milne Port PWSP. The off-spec effluent will be removed by vacuum truck and fed into the sewage plant feed tank for re-processing or treated by means of a pond treatment system (i.e. DAF system). Should there be high volumes of off-spec effluent greater than the capacity of the existing PWSP, the Type A Water Licence allows for the construction of a second PWSP to be built at Milne Port. This second PWSP (No. 2) would work in parallel with the existing PWSP and be treated in the same manner.

In the event that there is an electrical power outage that causes the STP(s) to be completely inoperable, raw sewage will be diverted temporarily and trucked to the PWSP, until the STP(s) is operational. At that time, partially or untreated sewage from the PWSP(s) will be trucked back to the treatment plant(s) for treatment or treated using an in situ pond treatment system and discharged to the ocean outfall (refer to Appendix G - PWSP Effluent Discharge Plan). The PWSP Effluent Discharge Plan is used as a reference guideline by the onsite environmental team. Discharges from Project PWSPs will be monitored and treated as outlined in the PWSP Effluent Discharge Plan to ensure effluent discharged meets the applicable water quality criteria outlined in the Type A Water Licence. In the event that water treatment methods differ significantly from the PWSP Effluent Discharge Plan, Baffinland will seek third party consultation and approvals to determine the appropriate water treatment methods.

The sludge generated by the MBR is de-watered using a mechanical de-watering device, a filter press, and then incinerated or backhauled for disposal off site. Sludge is stored in an animal proof secure area. Odour generation is limited as a result of the sludge being aerobically digested, de-watered and double bagged. Sewage sludge also accumulates in the bottom of the lift stations that service the accommodations camps at Project sites. Regular maintenance of the lift stations includes the periodic removal of the accumulated sewage sludge.

The sewage treatment system basis as described above will be applicable for current and future construction and operations requirements. The site layout showing the location of camp, sewage treatment and ancillary facilities is presented in Appendix C.

6.4.2 MINE SITE

The Mine Site has two (2) MBR STP facilities to service the MSC and the Sailiivik Camp Complex. Effluent is discharged via a direct effluent discharge line from the STP servicing the Sailiivik Camp Complex and Mine Site Complex to the approved discharge locations near the Mary River. The Rotating Biological Contactor (RBC) STP (Seprotech manufactured), previously used to treat sewage from the Mine Site Weatherhaven Camp, is currently being used as a temporary holding facility/surge tank for the Mine Site Weatherhaven Camp. Raw sewage is transported from the RBC by vacuum truck to the MBR STPs for treatment.

Treated effluent from the MBR STPs is stored in a series of treated effluent tanks. It is designed such that the effluent tanks will be at a low level during operation. This design allows for delay of discharge should sampling indicate that the effluent quality does not meet the applicable criteria. Such delay allows the

The information contained herein is proprietary Baffinland Iron Mines Corporation and is used solely for the purpose for which it is supplied.
It shall not be disclosed in whole or in part, to any other party, without the express permission in writing by Baffinland Iron Mines Corporation.

Note: This is an UNCONTROLLED COPY. All staff members are responsible to ensure the latest revision is used.

effluent to be mixed, retreated, and retested before discharge. Once sampling indicates that effluent meets discharge criteria the treated effluent stream is directed to discharge via pipelines to the Mary River discharge locations; one pipeline from the MSC MBR and one pipeline for the Sailiivik Camp MBR (refer to Table 6-3 for winter and summer discharge co-ordinates). The discharge locations at the Mine Site are shown on the Mine Site Layout presented in Appendix C.

To reduce potential sedimentation and/or erosion, riprap (i.e. coarse aggregate) has been used at the approved Mary River discharge locations. Mary River discharge locations are presented in the Mine Site Layout found in Appendix C.

In the event that there is an electrical power outage that causes the STP(s) to become inoperable, raw sewage will be temporarily trucked to local existing PWSPs until the STP(s) come on line again. Partially or untreated sewage from the PWSPs from this event will either be trucked back to the treatment plant(s) for treatment/reprocessing or treated in situ at the pond location (refer to Appendix G - PWSP Effluent Discharge Plan). The PWSP Effluent Discharge Plan is used as a reference guideline by the onsite environmental team. Water quality parameters will be monitored in the spring and a discharge plan will be developed based on the determined water quality conditions. Discharges from Project PWSPs will be monitored and treated as outlined in the PWSP Effluent Discharge Plan to ensure effluent discharged meets the applicable water quality criteria outlined in the Type A Water Licence. In the event that water treatment methods differ significantly from the PWSP Effluent Discharge Plan, Baffinland will seek third party consultation to determine the appropriate water treatment methods.

The sludge generated at the MBR is dewatered using a mechanical dewatering device, a filter press, and then incinerated or backhauled for disposal off site. Sludge cake is stored in an animal proof secure area. Odour generation is limited as a result of the sludge being aerobically digested, de-watered and double bagged. Sewage sludge also accumulates in the bottom of the lift stations that service the accommodations camps at Project sites. Regular maintenance of the lift stations includes the periodic removal of the accumulated sewage sludge.

The MBR STPs are designed to also process raw or partially treated sewage from the Raven and Mid-Rail camps in the event these facilities are operational.

The sewage treatment system basis as described above is adequate for current construction and operations requirements. The modular nature of the plants makes it very simple to add containerized plants for increased sewage treatment capacity. The site layout showing the location of camps, sewage treatment plants and ancillary facilities is presented in Appendix C.

The information contained herein is proprietary Baffinland Iron Mines Corporation and is used solely for the purpose for which it is supplied.
It shall not be disclosed in whole or in part, to any other party, without the express permission in writing by Baffinland Iron Mines Corporation.

Note: This is an UNCONTROLLED COPY. All staff members are responsible to ensure the latest revision is used.

7 WASTEWATER MANAGEMENT – OILY WATER

There are two sources of potentially oily water that have been identified at Milne Port and the Mine Site. There is the wash-water generated at the vehicle maintenance facilities, waste management building, emergency response garage, and truck wash, as well as the surface water that collects within the bulk fuel storage berms, hazardous waste storage berms and Landfarm facilities at Project sites. Based on the different nature of these two wastewater sources, distinct discharge criteria (and treatment plans) have been developed for each.

7.1 OILY WATER TREATMENT DISCHARGE CRITERIA

All discharge from the Oily Water/Wastewater Treatment Facilities for monitoring stations MP-02, MS-02, and SP-02 will not exceed the following effluent quality limits provided in Table 7-1.

TABLE 7-1: EFFLUENT DISCHARGE QUALITY LIMITS FOR OILY WATER TREATMENT FACILITIES*

Parameter	Maximum Concentration of Any Grab Sample (mg/L)
pH	6 – 9.5
TSS	35
Ammonia	4
Phosphorous	4
Benzene	0.370
Ethylbenzene	0.090
Toluene	0.002
Oil and Grease	15 and no visible sheen
Arsenic	0.50
Copper	0.30
Lead	0.20
Nickel	0.50
Zinc	0.50

*Source: Type A Water Licence (2AM-MRY1325 – Amendment No. 1) Table 6.

All discharge from Bulk Fuel Storage Facilities will not exceed the following effluent quality limits outlined in Table 7-2. Applicable monitoring stations include MP-03, MP-MRY-7, MS-03, MS-04, MS-MRY-6, SP-04 and SP-05.

The information contained herein is proprietary Baffinland Iron Mines Corporation and is used solely for the purpose for which it is supplied.
It shall not be disclosed in whole or in part, to any other party, without the express permission in writing by Baffinland Iron Mines Corporation.

Note: This is an UNCONTROLLED COPY. All staff members are responsible to ensure the latest revision is used.

TABLE 7-2: EFFLUENT DISCHARGE QUALITY LIMITS FOR THE BULK FUEL STORAGE FACILITIES*

Parameter	Maximum Concentration of any Grab Sample (mg/L)
Benzene	0.370
Toluene	0.002
Ethylbenzene	0.090
Lead	0.001
Oil and Grease	15 and no visible sheen

*Source: Type A Water Licence (2AM-MRY1325 Amendment No. 1) Table 8

All discharge from Landfarm Facilities, including the Contaminated Snow Containment Berms, will not exceed the following effluent quality limits outlined in Table 7-3. Applicable monitoring stations include MP-04, and MS-05.

TABLE 7-3: EFFLUENT DISCHARGE QUALITY LIMITS FOR THE LANDFARM FACILITIES*

Parameter	Maximum Concentration of any Grab Sample (mg/L)
pH range	Between 6.0 and 9.0
Total Suspended Solids	15
Oil and Grease	15 and no sheen
Total Lead	0.001
Benzene	0.370
Toluene	0.002
Ethylbenzene	0.090

*Source: Type A Water Licence (2AM-MRY1325 - Amendment No. 1) Table 9

7.2 OILY WATER/WASTEWATER POTENTIAL SOURCE LOCATIONS

The locations of potential sources of oily water on the Project are listed in Table 7-4.

Site/Camp	Facility	Description	Coordinates	
			Easting	Northing
Mine Site	MS-02	Mobile Maintenance Shop Sump	561638	7913222
Mine Site	MS-03	Bulk Fuel Storage Facility	561258	7913304
Mine Site	MS-03B	Bulk Fuel Storage Facility	561070	7913449
Mine Site	MS-04	Fuel Unloading Station	Not Constructed	Not Constructed
Mine Site	MS-05	Landfarm Facility	Not Constructed	Not Constructed

The information contained herein is proprietary Baffinland Iron Mines Corporation and is used solely for the purpose for which it is supplied.
It shall not be disclosed in whole or in part, to any other party, without the express permission in writing by Baffinland Iron Mines Corporation.

Note: This is an UNCONTROLLED COPY. All staff members are responsible to ensure the latest revision is used.

Mine Site	MS-MRY-6	Exploration Camp Bulk Fuel Storage Facility	558309	7914487
Milne Port	MP-02	Mobile Maintenance Shop Sump	503785	7976209
Milne Port	MP-03	Bulk Fuel Storage Facility	503638	7976272
Milne Port	MP-04	Landfarm Facility	503710	7975574
Milne Port	MP-04A	Contaminated Snow Facility	503862	7975482

7.3 OILY WATER/WASTEWATER TREATMENT PROCESS DESCRIPTION

Oily water and wastewater generated by the Project shall be treated at the Oily Water/Wastewater Treatment Facilities allowed under the scope of the Type A Water Licence. The process description for both oily water/wastewater treatment systems at each site are described in the sections that follow.

7.3.1 MANAGEMENT OF OILY WATER AT MILNE PORT

Sources of oily water that may be generated at Milne Port (excluding minor oily water generated from accidental spills which is addressed under the Spill Contingency Plan; SCP) are:

- Vehicle maintenance and wash facilities (i.e. truck wash, snow/ice melt, equipment and floor wash down water);
- Bulk fuel storage facility (water in the tank farm containment areas);
- Concrete sumps in buildings such as Maintenance Shops, Waste Management Building, Emergency Response Building, etc.;
- Lined containment facilities (i.e. hazardous waste and product storage berms); and,
- Landfarm Facility including the Contaminated Snow Containment Facility.

All possible sources listed above are shown in the Milne Port layout presented in Appendix C.

Any oily water generated from the Milne Port Bulk Fuel Storage Facility or other lined containment facilities is collected in sump(s) within each facility. The water is then treated directly by the prefabricated mobile Oily Water Separator (OWS) contained within a 40’ seacan or an on-site constructed OWS. The prefabricated mobile OWS uses a series of skimmers, filters, clay, and activated carbon to capture and remove hydrocarbons from oily water.

Wash and melt water generated at the vehicle maintenance facilities, waste management building, and emergency response garage collects in each building’s designated sump(s) by gravity flow. Suspended material in the wastewater settles out in the sump. All sump water collected in these buildings is collected and stored at engineered lined containment facilities until the water can be treated during the open water

The information contained herein is proprietary Baffinland Iron Mines Corporation and is used solely for the purpose for which it is supplied.
It shall not be disclosed in whole or in part, to any other party, without the express permission in writing by Baffinland Iron Mines Corporation.

Note: This is an UNCONTROLLED COPY. All staff members are responsible to ensure the latest revision is used.

season using the mobile OWS system. Following treatment by the OWS, the treated effluent is pH adjusted, if required, and resampled to ensure effluent water quality meets the applicable discharge criteria before the effluent is finally discharged to the receiving environment.

All effluent discharges of treated oily water/wastewater to the receiving environment will be discharged to meet effluent discharge criteria outlined in Section 7.1.

7.3.2 MANAGEMENT OF OILY WATER AT THE MINE SITE

Sources of oily water that may be generated at the Mine Site (excluding minor oily water generated from accidental spills which is addressed under the SCP) are:

- Vehicle maintenance and wash facilities (i.e. truck wash, snow/ice melt, equipment and floor wash down water);
- Bulk fuel storage facilities (water in the tank farm containment areas);
- Concrete sumps in buildings such as Maintenance Shops, Waste Management Building, Emergency Response Building, etc.; and,
- Lined containment facilities (i.e. hazardous waste and product storage berms).

All possible sources listed above are shown in the Mine Site layout presented in Appendix C.

Wash and melt water generated at the vehicle maintenance facilities, truck wash, waste management building, and emergency response garage collects in each building's designated sump(s) by gravity flow. Suspended material in the wastewater settles out in the sump. All sump water collected in these buildings will be transferred to totes that will be stored in hazardous containment lined facilities. The water in these totes will be discharged and treated in lined berms utilizing the mobile OWS system or shipped off site for disposal at an accredited treatment facility.

The Truck Wash Facility is equipped with an oily water treatment plant as well as trays and a sump to capture all wash water generated at the facility, allowing it to recycle up to 90% of the water used. Wash water produced in the truck wash facility (truck washing, equipment and floor wash down) will flow by gravity and be collected in the trays and a local sump. Suspended material in the wastewater is removed using a series of sumps, settling tanks (de-muck tank) and filters. Free and emulsified oil in the wastewater is removed by the facility's oily water treatment plant which utilizes a series of skimmers, activated carbon and filters in order to substantially reduce oil levels in the recycled wastewater. The water is then reused by the facility to wash down equipment and vehicles. Should there need to be a discharge from the facility to the receiving environment, the wastewater is further treated with the facility's reverse osmosis unit and pH controller to ensure the final effluent meets all discharge criteria outlined in the Type A Water Licence.

Treated effluent from the truck wash's oily water treatment plant will be pumped to the discharge outfall at the Mary River or other on land location as agreed to by the Water Licence Inspector. Most water is

The information contained herein is proprietary Baffinland Iron Mines Corporation and is used solely for the purpose for which it is supplied.
It shall not be disclosed in whole or in part, to any other party, without the express permission in writing by Baffinland Iron Mines Corporation.

Note: This is an UNCONTROLLED COPY. All staff members are responsible to ensure the latest revision is used.

recycled and reused within the facility. The separated waste oil will be stored in a local tank. Periodically, the oil from the tank will be drained and shipped off site or incinerated. Accumulated suspended solids will be periodically removed by bucket loader vehicle and sent to the Landfarm Facility for treatment if contaminated with hydrocarbons or the landfill if demonstrated to be non-hazardous.

Collected stormwater run-off from the Mine Site Bulk Fuel Storage Facility and/or other lined containment facilities (i.e. hazardous waste berms, etc.) will be treated using the mobile OWS system and discharged directly to the adjacent land surface. As mentioned prior, the mobile OWS system is a prefabricated mobile oily water separator contained within a 40' seacan. The mobile OWS system uses a series of skimmers, filters, clay and activated carbon to capture and remove oils and hydrocarbons from wastewater. Effluent from the mobile OWS will be sampled regularly to ensure effluent quality meets the applicable discharge criteria outlined in the Type A Water Licence.

7.3.3 MANAGEMENT OF OILY WATER AT STEENSBY PORT

The construction of Steensby Port and associated railway has not commenced to date. As a result, oily water treatment has not been initiated at the Steensby Port Location. This plan will be updated prior to the commencement of construction of Steensby Port and the associated railway to reflect planned water management and monitoring.

The information contained herein is proprietary Baffinland Iron Mines Corporation and is used solely for the purpose for which it is supplied.
It shall not be disclosed in whole or in part, to any other party, without the express permission in writing by Baffinland Iron Mines Corporation.

Note: This is an UNCONTROLLED COPY. All staff members are responsible to ensure the latest revision is used.

8 WASTEWATER MANAGEMENT – CONTACT WATER

Contact water for the purposes of this Plan is defined as water that has come in contact with ore or waste rock; it is considered to be the equivalent to mine effluent as defined under the MDMER. The water management ponds described in the sections below retain runoff water from the Milne Port ore stockpile pad and the Mine Site crushing pad, Run of Mine Stockpile (ROM), and waste rock stockpile. In the event of abnormal conditions at an existing surface water management pond, Baffinland will consult an engineer for recommendations on required improvements or upgrades.

8.1 DISCHARGE CRITERIA

All discharge from the water management ponds (MS-06, MS-07, MS-08, MS-09, and SP-07) associated with the Project's mining operations (crushing, ore, and waste rock stockpiles) will not exceed the effluent quality limits outlined in the Type A Water Licence and provided in Table 8-1.

In addition, effluent discharged from water management ponds at the Mine Site (MS-06, MS-07, MS-08, MS-09) will not exceed the effluent quality limits within the MDMER provided in Table 8-2. When the maximum limit for a parameter differs between the MDMER and the Type A Water Licence discharge criteria, the more conservative (lower) limit for the parameter will be adopted.

TABLE 8-1: EFFLUENT DISCHARGE QUALITY LIMITS FOR OPEN PIT, STOCKPILES, AND SURFACE WATER MANAGEMENT PONDS (NWB)*

Parameter	Maximum Concentration of Any Grab Sample (mg/L)
Total Arsenic	0.50
Total Copper	0.30
Total Lead	0.20
Total Nickel	0.50
Total Zinc	0.50
Total Suspended Solids	15
Oil and Grease	No visible sheen
Toxicity	Not acutely toxic
pH	6.0 – 9.5

*Source: Type A Water Licence (2AM-MRY1325 – Amendment No. 1) Table 10.

The information contained herein is proprietary Baffinland Iron Mines Corporation and is used solely for the purpose for which it is supplied.
It shall not be disclosed in whole or in part, to any other party, without the express permission in writing by Baffinland Iron Mines Corporation.

Note: This is an UNCONTROLLED COPY. All staff members are responsible to ensure the latest revision is used.

TABLE 8-2: EFFLUENT DISCHARGE QUALITY LIMITS FOR OPEN PIT, STOCKPILES, AND SURFACE WATER MANAGEMENT PONDS (ECCC)*

Parameter	Mean Monthly Limit (mg/L)[1]	Maximum Concentration of Any Grab Sample (mg/L)
Total Arsenic	0.50	1.00
Total Copper	0.30	0.60
Total Lead	0.20	0.40
Total Nickel	0.50	1.00
Total Zinc	0.50	1.00
Total Suspended Solids	15	30
Radium-226	0.37 Bq/L	1.11
pH	6 – 9.5	6 – 9.5
Toxicity	Not acutely toxic	Not acutely toxic
Un-ionized Ammonia	0.50	1.00

*Source: Metal and Diamond Mining Effluent Regulations, Schedule 4

[1] Parameters listed above are sampled weekly during discharge.

Additional parameters including sub-lethal toxicity, aluminum, cadmium, iron, mercury, molybdenum, selenium, nitrate, ammonia, chloride, chromium, cobalt, sulphate, thallium, uranium, phosphorus, manganese, hardness, alkalinity and specific conductance are also required under MDMER, however these parameters do not have a maximum water quality discharge limit but instead are used to provide additional information to assist in interpreting toxicity results and identifying potential effects on the receiving environment. For additional information on the MDMER requirements pertaining to the Project refer to Appendix I.

8.2 CONTACT WATER FACILITY AND DISCHARGE LOCATIONS

The locations of the contact water management facilities, and their respective discharge points are listed in Table 8-3.

Site	Facility	Description	Facility Coordinates		Final Discharge Point Coordinates	
			Easting	Northing	Easting	Northing
Mine Site	MS-06	Crusher Pad Stormwater Facility	561475	7913000	561474	7913000
Mine Site	MS-07	Run Of Mine Stockpile Stormwater Facility	563475	7913058	563583	7913074
Mine Site	MS-08	Waste Rock Stormwater Facility	562901	7916776	563217	7916789

The information contained herein is proprietary Baffinland Iron Mines Corporation and is used solely for the purpose for which it is supplied.
It shall not be disclosed in whole or in part, to any other party, without the express permission in writing by Baffinland Iron Mines Corporation.

Note: This is an UNCONTROLLED COPY. All staff members are responsible to ensure the latest revision is used.

Mine Site	MS-09	Waste Rock Stormwater Facility	Not Constructed	Not Constructed	N/A	N/A
Milne Port	MP-05	Ore Stockpile Stormwater Facility	503469	7976383	N/A	N/A
Milne Port	MP-06	Ore Stockpile Stormwater Facility	503097	7976363	N/A	N/A

8.2.1 MILNE PORT STOCKPILE SURFACE WATER MANAGEMENT PONDS

The three (3) Milne Port stockpile surface water management ponds were constructed to retain the runoff water from the Milne Port ore stockpile area and to contain the sediment load. Ore stockpile contact water includes water that has come in contact with DusTreat, a specialized crusting agent produced by SUEZ Water & Solutions Canada (SUEZ). DusTreat is a rain resistant and non-toxic substance that coats the outside of the ore stockpiles acting as a sealant to prevent lift-off of dust from the stockpiles. The application of DusTreat to the ore stockpiles was initiated in 2020 and application will continue on an ongoing basis as sections of the stockpiles are built to permanent locations.

During normal operation, runoff from the stockpile area drains to the stockpile surface water management ponds. The ponds were designed with sufficient retention time to ensure the sediment will gravity-settle to the bottom of the pond and allow the runoff to be tested before the water reaches the overflow weirs. The ponds are equipped with overflow weirs designed to allow the unloaded surface water to drain through a controlled discharge to Milne Inlet. Alternatively, the pond can be pumped out using a portable pump arrangement.

In the case that the surface water management pond effluent quality does not meet the discharge criteria outlined in the Type A Water Licence by means of sediment gravity settling alone, additional treatment methods (i.e. flocculants, GAC, clay, filters, etc.) will be employed to ensure effluent compliance.

8.2.2 MINE SITE ORE CRUSHER PAD SURFACE WATER MANAGEMENT POND

The Mine Site ore crusher pad surface water management pond is designed to retain the runoff water from the Mine Site Crusher Facility (CF) and contain the sediment load, particularly during seasonal freshet activities. During normal operation, runoff from the crusher area drains to the surface water management pond (west of the crusher pad). The pond is equipped with an overflow weir designed for extreme weather periods (e.g. greater than a 1 in 10 year, 24 hour design storm), allowing the unloaded surface water to drain through a controlled discharge to Sheardown Lake. The pond was designed with sufficient retention time to ensure the sediment would gravity-settle to the bottom of the pond before the water reaches the overflow weir.

The information contained herein is proprietary Baffinland Iron Mines Corporation and is used solely for the purpose for which it is supplied.
It shall not be disclosed in whole or in part, to any other party, without the express permission in writing by Baffinland Iron Mines Corporation.

Note: This is an UNCONTROLLED COPY. All staff members are responsible to ensure the latest revision is used.

The pond is also equipped with a pump pad on the northwest side. The normal operation of the pond is to test the water quality for MDMER and applicable Type A Water Licence requirements and when on spec, control discharge using a portable pump arrangement. The pump arrangement connects into the treated effluent discharge pipeline originating at the MSC STP for discharge to Mary River.

In the case that the surface water management pond effluent quality does not meet the applicable discharge criteria by means of sediment gravity settling alone, additional treatment methods (i.e. flocculants, GAC, clay, filters, etc.) will be employed to ensure effluent compliance.

8.2.3 MINE SITE RUN OF MINE STOCKPILE SURFACE WATER MANAGEMENT POND

The Mine Site Run of Mine (ROM) stockpile infrastructure supports Deposit No. 1 mining operations and is located off the Mine Haul Road at approximately kilometer 106. Stormwater runoff originating in the ROM stockpile is intercepted by the Facility's perimeter collection ditches and directed to the ROM pond. The ROM pond is designed to retain the runoff and contain the sediment load, particularly during freshet activities. During normal operation, runoff from the ROM stockpile drains to the surface water management pond. The pond is equipped with an overflow weir designed for extreme weather periods (e.g. greater than a 1 in 200 year, 24 hour design storm), allowing the unloaded surface water to drain through a controlled discharge to Mary River.

In the case that the surface water management pond effluent quality does not meet the applicable discharge criteria by means of sediment gravity settling alone, additional treatment methods (i.e. flocculants, GAC, clay, filters, etc.) will be employed to ensure effluent compliance.

8.2.4 MINE SITE WASTE ROCK STOCKPILE POND

The Waste Rock Facility Surface Water Management Pond (WRF Pond) was constructed to support Deposit No. 1 mining operations and is located northeast of the Deposit No. 1 open pit. Seepage and stormwater runoff originating from the Waste Rock Stockpile is intercepted by the Facility's perimeter collection ditches and directed to the WRF Pond. The WRF Pond for the Mine Site was constructed in 2016 and is designed to retain surface water runoff. The capacity of the pond was upgraded in 2019 to account for an expansion of the Waste Rock Facility. Controlled transfers of in pit mine water to the WRF Pond for treatment through the WTP may also occur in accordance with Baffinland's Surface Water and Aquatic Ecosystem Management Plan (SWAEMP).

Water from the WRF Pond is pumped into the Water Treatment Plant (WTP) for pH adjustment, and subsequently discharged into a geotube adjacent to the WTP for solids removal via filtering and settling. The WTP has a design treatment rate of 280 m^3/hr capacity, consisting of two 140 m^3/hr treatment trains. For each train, the water flow rate and pH in Reactor Tanks 1 and 2 is continuously monitored. Ferric sulfate and polymer is added based on flow rate, while the lime dosage is based on the pH in Reactor Tank 1. The chemical dose rate is adjusted by the plant operator using the PLC to achieve water quality requirements. Monitoring of the treated effluent at various stages of the treatment system is conducted to monitor the treatment system's performance. The Waste Pond Water Treatment Plant Operations SOP,

The information contained herein is proprietary Baffinland Iron Mines Corporation and is used solely for the purpose for which it is supplied.
It shall not be disclosed in whole or in part, to any other party, without the express permission in writing by Baffinland Iron Mines Corporation.

Note: This is an UNCONTROLLED COPY. All staff members are responsible to ensure the latest revision is used.

which includes plant operating procedures as well as an overview of the treatment process, and General Arrangement Drawings is provided in Appendix K. Additional contingency water treatment measures are described in Section 9.2 of the Phase 1 Waste Rock Management Plan.

The effluent from the geotube is tested to ensure it meets MDMER and applicable Type A Water Licence criteria and then controlled discharged intermittently using a portable pump arrangement. Sludge generated from the operation of the WRF WTP is assessed for suitability of disposal within the WRF, or disposed of off-site at an appropriate waste receiving facility. Following the Final Discharge Point (FDP), effluent passes through approximately 475 metres (m) of layflat hose and is discharged to the tundra of the approved receiving environment, the Mary River watershed.

In high rainfall periods (e.g. greater than a 1 in 10 year, 24 hour design storm), the WRF Pond is also equipped with an overflow weir on the north side designed to allow the unloaded surface water to drain through a controlled discharge diversion channel. The WRF Pond was designed with sufficient retention time to ensure the sediment would gravity-settle to the bottom of the pond before the water reaches the overflow weir. However, controlled discharges from the pond via active pumping are implemented.

8.2.5 STEENSBY PORT CONTACT WATER MANAGEMENT

The construction of Steensby Port and associated railway has not commenced to date. As a result, contact water management has not been initiated. This plan will be updated prior to the commencement of construction of Steensby Port and the associated railway to reflect planned water management and monitoring.

The information contained herein is proprietary Baffinland Iron Mines Corporation and is used solely for the purpose for which it is supplied.
It shall not be disclosed in whole or in part, to any other party, without the express permission in writing by Baffinland Iron Mines Corporation.

Note: This is an UNCONTROLLED COPY. All staff members are responsible to ensure the latest revision is used.

9 LANDFILL

9.1 DISCHARGE CRITERIA

All runoff and seepage from the Landfill Facilities at monitoring stations MS-MRY-13A, and MS-MRY-13B will not exceed the following effluent quality limits presented in the table below:

TABLE 9-1: EFFLUENT DISCHARGE QUALITY LIMITS FOR THE LANDFILL FACILITIES*

Parameter	Maximum Concentration of Any Grab Sample (mg/L)
pH range	Between 6.0 and 9.5
Total As	0.5
Total Cu	0.3
Total Pb	0.2
Total Ni	0.5
Total Zn	0.5
TSS	15
Oil and Grease	No visible sheen

*Source: Type A Water Licence (2AM-MRY1325 - Amendment No. 1) Table 7

9.2 MINE SITE LANDFILL

The Mine Site Landfill Facility is located just south of the NE Basin of Sheardown Lake. Both Facility's monitoring stations, MS-MRY-13A and MS-MRY-13B, are sampled monthly during the open water season and are situated on a small stream down gradient of the Landfill Facility. The small stream drains into the NE Basin of Sheardown Lake on its southern shoreline. Refer to the Mine Site Layout presented in Appendix C for the exact location of the monitoring stations and Landfill Facility.

The information contained herein is proprietary Baffinland Iron Mines Corporation and is used solely for the purpose for which it is supplied.
It shall not be disclosed in whole or in part, to any other party, without the express permission in writing by Baffinland Iron Mines Corporation.

Note: This is an UNCONTROLLED COPY. All staff members are responsible to ensure the latest revision is used.

10 OPERATIONS AND MAINTENANCE (O & M)

The project specific O&M Manual for Sewage Treatment Systems is provided by Newterra Ltd in Appendix E. Sample plans for operation and maintenance of the potable water and oily water systems are given below. These plans were provided by the vendors of the potable and oily water treatment systems.

10.1 POTABLE WATER TREATMENT SYSTEM O & M PLAN

10.1.1 REGULAR MAINTENANCE SCHEDULE

The potable water system is fully automatic, and only requires limited supervision and regular maintenance. The following maintenance schedule provided in Table 10-1 is subject to regulations from local government, and instructions from original equipment manufacturers. The following maintenance schedule is common for all potable treatment plants.

TABLE 10-1: RECOMMENDED MAINTENANCE SCHEDULE - POTABLE TREATMENT PLANTS

Items	Description
Daily	• Alarm check. • Chemical storage level check. • Controller time check. • Pressure gauge check. • Total and free chlorine testing. • Turbidity check.
Monthly	• Turbidity analyzer check/calibration. • Residual chlorine/pH analyzer check/calibration.
Annual	• Filter media level check, and refill if required. • UV lamp replacement.

10.1.2 MONITORING PLAN

The monitoring plan is subject to local regulations of drinking water and other related codes. The following instruments are used to monitor the operation and performance of the potable water system.

- Inlet flow meter: to monitor feed flow, backwash flow, rinse flow and filtered flow;
- Effluent turbidity analyzer: to monitor turbidity in produced water; and,
- Effluent pH/residual chlorine analyzer: to monitor pH and residual chlorine of produced water.

The PLC system in the control panel will totalize raw water, produced water, backwash water, chemical injection, pump running time etc.

The information contained herein is proprietary Baffinland Iron Mines Corporation and is used solely for the purpose for which it is supplied.
It shall not be disclosed in whole or in part, to any other party, without the express permission in writing by Baffinland Iron Mines Corporation.

Note: This is an UNCONTROLLED COPY. All staff members are responsible to ensure the latest revision is used.

Periodically sampling and lab tests for raw water and treated water will be applied to ensure the treated water meets drinking water standards. The frequency of the sampling and testing will be determined by the ministry and outlined in the certificate of approval.

10.2 MOBILE OILY WATER SEPARATOR (OWS) SYSTEM

10.2.1 SYSTEM OVERVIEW

The mobile OWS is a prefabricated system (Newterra Ltd.) housed in a 40' seacan and is designed to remove oil, grease and BTE compounds from hydrocarbon contaminated water. The unit includes an API type separator to remove free product, a bag filter for solids removal and three adsorption units (one clay, two granular activated carbon) for oil/grease and BTE removal. In the event that the contaminated water has lead concentrations that exceed the discharge limits outlined in Baffinland's Type A Water Licence, additional treatment barrels containing lead removal media are added to the end of the mobile OWS unit. Figure 10-1 shows the Process Flow Diagram for the OWS. The OWS (Newterra Ltd. model OWS-24) is sized for a water temperature of 7°C, specific gravity of 0.88 (diesel/furnace oil), TOG concentration of 50mg/L and flow rate of 50 gpm.

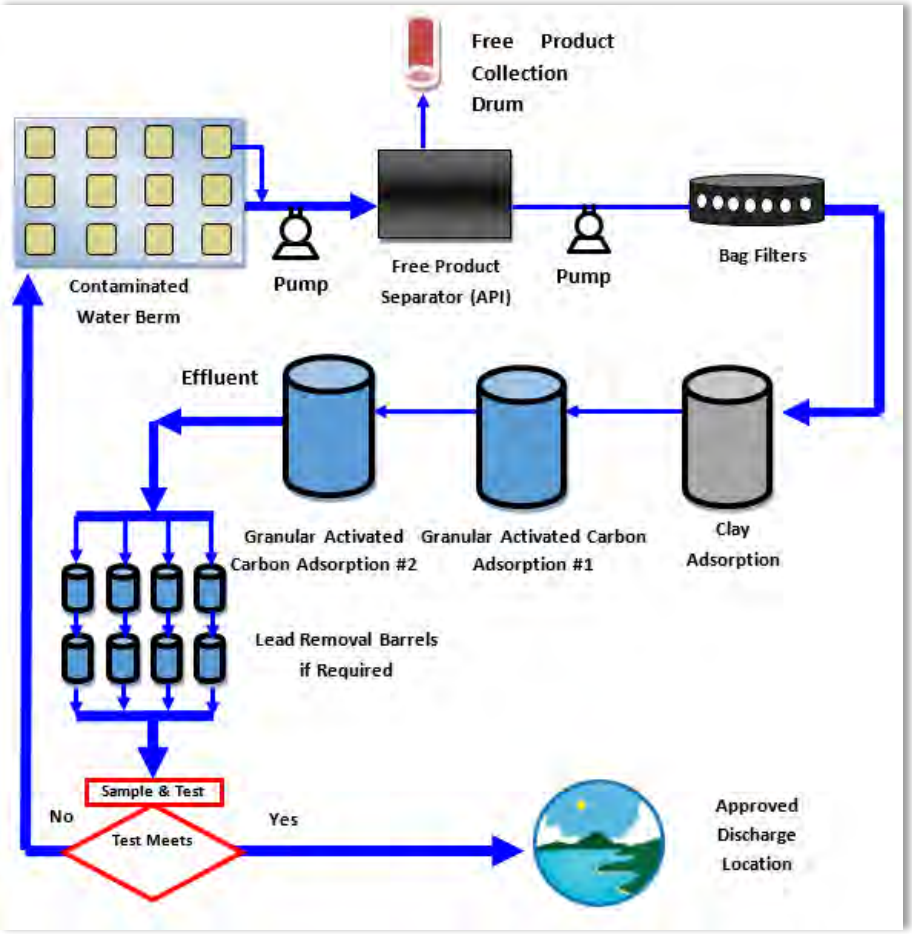

FIGURE 10-10-1 – MOBILE OWS FLOW PROCESS DIAGRAM

The information contained herein is proprietary Baffinland Iron Mines Corporation and is used solely for the purpose for which it is supplied.
It shall not be disclosed in whole or in part, to any other party, without the express permission in writing by Baffinland Iron Mines Corporation.

Note: This is an UNCONTROLLED COPY. All staff members are responsible to ensure the latest revision is used.

10.2.2 OPERATION AND MAINTENANCE PLAN

For the O&M procedures and schedule relating to the mobile OWS unit, refer to the Baffinland Mobile Oily Water Separator (OWS) Manual provided in Appendix H.

10.3 OILY WATER TREATMENT PLANT (FOR VEHICLE WASH WATER) O & M PLAN

10.3.1 REGULAR MAINTENANCE AND MONITORING SCHEDULE

Regular system maintenance entails routine inspection of mechanical and electrical components. It is recommended that the system be inspected weekly to ensure that components are in good working order. Spare parts lists are included with the Operations and Maintenance Manuals, with critical spare parts and system expendables highlighted. Recommended stock quantities are be given.

Operational maintenance is mainly comprised of waste removal and expendable replacement in addition to some preventative maintenance on mechanical components. Maintenance activities, locations and their recommended frequencies are given in Table 10-2.

TABLE 10-2: MAINTENANCE ACTIVITIES, LOCATIONS AND THEIR RECOMMENDED FREQUENCIES

Maintenance Task	Location	Frequency
Sludge/sediment removal	De-muck tank	Twice/week
Oil Removal	Waste oil storage	Weekly
Media change out	CMAFU-2	TBD
Media change out	DPL30	TBD
Filter change out	Reverse Osmosis Unit	TBD
Membrane cleaning	Reverse Osmosis Unit	TBD
Media change out (plates)	Oil Coalescing System	TBD
Pump seals	Various	Annually

Additional, non-routine maintenance will be required throughout the life of the equipment. The recommended spare parts list and appropriate site stock levels are designed to keep the system running continuously with only scheduled downtime.

In addition to maintenance, monitoring the system performance and effluent quality are also necessary. A flow totalizer will be used at the effluent discharge to accurately summate the volume of treated water being released. This in conjunction with the quality data from the various system flows will allow forecasting for media and consumable change-out as well as waste oil and sludge/sediment generation. Residual contaminants below the regulatory limits can also be used in conjunction with treated volumes to determine area loadings over certain periods of time.

Monitoring tasks, locations and frequencies are listed in Table 10-3. The prefix, GI, in the task column denotes “General Inspection”. The Truck Wash Facility layout and component O & M manuals are presented in Appendix J.

The information contained herein is proprietary Baffinland Iron Mines Corporation and is used solely for the purpose for which it is supplied.
It shall not be disclosed in whole or in part, to any other party, without the express permission in writing by Baffinland Iron Mines Corporation.

Note: This is an UNCONTROLLED COPY. All staff members are responsible to ensure the latest revision is used.

TABLE 10-3: MONITORING TASKS, LOCATIONS AND FREQUENCIES

Monitoring Task	Location	Frequency
GI – solids/liquid separators (levels, appearance, pump operation)	De-muck system, CMAFU-2	Daily
Sample – solids/liquid separator effluent	CMAFU-2 effluent	TBD
GI – OWS (levels, appearance, dosing pump)	OWS room	Daily
Sample – OWS Inlet	CMAFU-2 effluent	TBD
GI – Chemical Treatment (tanks, totes, levels, appearance, mixers, dosing pumps, effluent pump, pressures)	Chemical room	Daily
GI – Filtration (units, pressures)	Reverse Osmosis Unit	Daily
GI – Media Vessels (units, pressures, backwash pump, treated water storage)	OCS Tank, DPL30	Daily
Sample – OWS outlet	DPL30 effluent	Quarterly/Monthly
Sample – Reverse osmosis effluent	Reverse Osmosis Unit effluent	Quarterly/Monthly
GI – Miscellaneous (vertical heaters, air compressors, air dryers, controls)	Various	Daily

A joint maintenance/monitoring log is kept to ensure that operational data and changes/responses are properly documented.

The monitoring guidelines are recommended as a minimum to ensure proper operation, health, safety and the protection of the surrounding environment. If corporate or regional policies in effect or enacted require more stringent monitoring, the scope and schedule will be adjusted to meet these requirements.

The information contained herein is proprietary Baffinland Iron Mines Corporation and is used solely for the purpose for which it is supplied.
It shall not be disclosed in whole or in part, to any other party, without the express permission in writing by Baffinland Iron Mines Corporation.

Note: This is an UNCONTROLLED COPY. All staff members are responsible to ensure the latest revision is used.

11 CONTINGENCY MEASURES

Design criteria for the potable, sewage and oily water treatment systems and discharge criteria for surface water management ponds have been reviewed and revised to provide additional safety factors.

To effectively manage emergency responses, Baffinland has adopted a tiered emergency classification scheme (Figure 11-1). Each level of emergency, based on its severity, requires varying degrees of response, effort, and support. Each level has distinct effects on normal business operations, as well as requirements for investigation and reporting. Levels of classification specific to spill response are as follows:

Level 1 (Low) – Minor accidental release of a deleterious substance with:

- No threat to public safety; and/or
- Negligible environmental impact to receiving environment.

Level 2 (Medium) – Major accidental release of a deleterious substance with:

- Some threat to public safety; and/or
- Potential Moderate environmental impact to receiving environment

Level 3 (High) – Uncontrolled hazard which:

- Jeopardizes project personnel safety: and/or
- Potential significant environmental impacts to receiving environment.

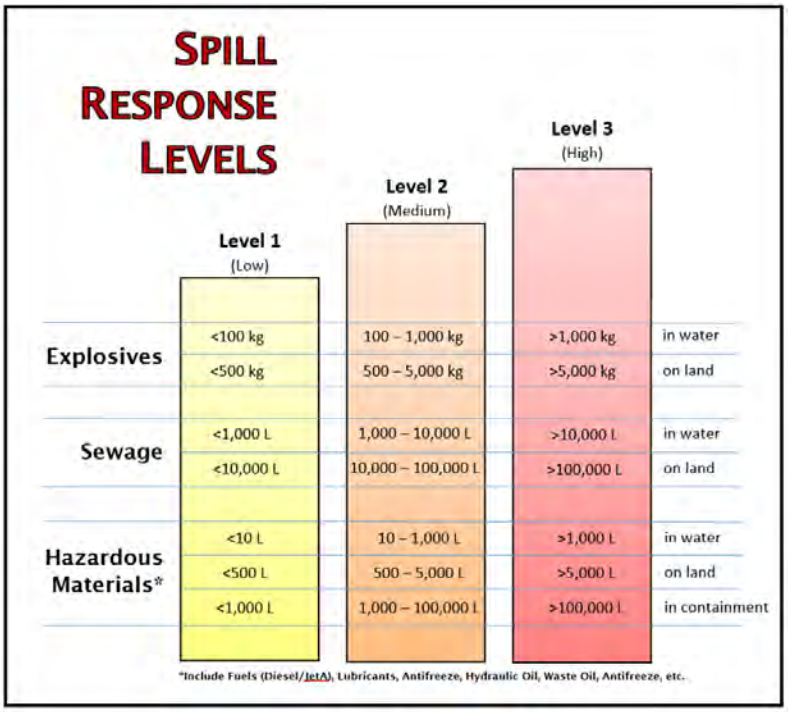

FIGURE 11-1 - EMERGENCY SPILL REPONSE LEVELS

The sewage treatment systems are set back sufficiently from surface water bodies and are fully enclosed units. In the event of a spill of untreated or partially treated sewage from these facilities, Baffinland will

The information contained herein is proprietary Baffinland Iron Mines Corporation and is used solely for the purpose for which it is supplied.
It shall not be disclosed in whole or in part, to any other party, without the express permission in writing by Baffinland Iron Mines Corporation.

Note: This is an UNCONTROLLED COPY. All staff members are responsible to ensure the latest revision is used.

follow the procedures in its SCP and Emergency Response Plans. In the event that sewage discharge does not meet applicable discharge criteria, raw sewage will be temporarily trucked to the existing PWSPs or to another on-site STP for treatment. Partially or untreated sewage from the PWSPs from this event will either be trucked back to the treatment plant(s) for treatment/reprocessing or treated in situ at the pond location (refer to Appendix G - PWSP Effluent Discharge Plan). The PWSP Effluent Discharge Plan is used as a reference guideline by the on-site environmental team. Water quality parameters will be monitored in the spring and a discharge plan will be developed based on the determined water quality conditions. Discharges from Project PWSPs will be monitored and treated as outlined in the PWSP Effluent Discharge Plan to ensure effluent discharged meets the applicable water quality criteria outlined in the Type A Water Licence. In the event that water treatment methods differ significantly from the PWSP Effluent Discharge Plan, Baffinland will seek third party consultation to determine the appropriate water treatment methods.

Effluent from the mobile OWS is sampled regularly to ensure effluent quality meets the applicable discharge criteria outlined in the Type A Water Licence. In the case of an accidental spill of oily water, Baffinland will follow the procedures in its SCP and Emergency Response Plans. In the event of a release of oily water in exceedance of applicable discharge criteria, discharge will be ceased immediately and treatment options will be evaluated. Prior to resuming discharge, resampling will occur to ensure effluent water quality meets the applicable discharge criteria before the effluent is finally discharged to the receiving environment.

Surface water management ponds are discharged in adherence to the MDMER and Type A Water Licence discharge criteria. Workers involved in the pumping operations exercise caution when setting up and operating pumps on the pond liners. While installing the pump's intake hose on an inner tube in a pond, workers will be in particularly close proximity to the water. The workers should ensure they have dry, secure footing while performing this task. When compliant results are received from pre-discharge water samples, surface water management ponds can be discharged.

Discharge is discontinued if internal or external results are approaching or exceed applicable water quality criteria. In the event of a spill of non-compliant water, Baffinland will follow the procedures in its SCP and Emergency Response Plans (see Appendix L for the MDMER Emergency Response Plan). In cases where water retained in water management infrastructure is determined to be non-compliant with applicable discharge limits, retained water (effluent) will be treated as per this Plan, the Phase 1 Waste Rock Management Plan, Waste Pond Water Treatment Plant Operations and MDMER ERP to ensure compliance with the applicable discharge limits. Potential treatment options include use of temporary treatment systems to alter water chemistry with various mixing and dosing components, arranging equipment on the discharge end of the pump/discharge to provide final polishing before the water enters the receiving environment, or incorporation of additional treatment steps to ensure effluent water quality is compliant.

The information contained herein is proprietary Baffinland Iron Mines Corporation and is used solely for the purpose for which it is supplied.
It shall not be disclosed in whole or in part, to any other party, without the express permission in writing by Baffinland Iron Mines Corporation.

Note: This is an UNCONTROLLED COPY. All staff members are responsible to ensure the latest revision is used.

12 MONITORING

Generally, monitoring of the potable and wastewater treatment systems include the following:

- Regular sampling of sewage and wastewater discharge in accordance with the Type A Water Licence requirements;
- More frequent internal process sampling and monitoring to identify potential upset conditions early that could potentially lead to non-compliance;
- Recording of volumes of sewage and wastewater effluent discharged and sludge generated in accordance with the Type A Water Licence requirements;
- Completion of daily checklists related to O&M requirements for the facilities and reporting of any upset conditions that require action; and,
- Implementation of the Aquatic Effects Monitoring Program to confirm/validate environmental predictions.

12.1 POTABLE WATER SYSTEM MONITORING

Untreated freshwater will be sampled at active take locations and/or from the raw water tank at the potable treatment plants. Treated potable water will be sampled from the potable treatment plant effluent as well as several locations throughout the distribution system.

Samples are collected at active water take locations for select analyses at frequencies specified in applicable regulations/guidelines. A typical list of parameters which are tested includes the following:

Calcium, Magnesium, Sodium, Potassium, Aluminum, Arsenic, Boron, Barium, Cadmium, Chromium, Cobalt, Copper, Iron, Lead, Manganese, Molybdenum, Nickel, Selenium, Silver, Strontium, Thallium, Vanadium, Zinc, Tin, pH, Conductivity, Alkalinity as CaCO3, Total Dissolved Solids (TDS), Total Suspended Solids (TSS), Turbidity, Phenols, Ammonia (NH_3), Sulphate (SO_4), Cl, Br, Nitrite (NO_2), Nitrate (NO_3), Mercury, Hardness as CaCO3, Chemical Oxygen Demand (COD) and Oil and Grease.

Sampling results are compared to the Guidelines for Canadian Drinking Water Quality (GCDWQ).

12.2 SEWAGE TREATMENT SYSTEM MONITORING

Treated sewage effluent is monitored and sampled at the locations specified in the Type A Water Licence. The effluent discharge criteria is summarized in Table 6-2.

12.3 OILY WATER TREATMENT SYSTEM MONITORING

Treated oily water effluent is monitored and sampled at the locations specified in the Type A Water Licence. The applicable effluent discharge criteria for oily water is summarized in Section 7.1.

The information contained herein is proprietary Baffinland Iron Mines Corporation and is used solely for the purpose for which it is supplied.
It shall not be disclosed in whole or in part, to any other party, without the express permission in writing by Baffinland Iron Mines Corporation.

Note: This is an UNCONTROLLED COPY. All staff members are responsible to ensure the latest revision is used.

12.4 TRAINING AND AWARENESS

Baffinland staff and contractors working on site receive environmental training as part of the site orientation to achieve a basic understanding of their obligations regarding environmental compliance with regulatory requirements, commitments and best practices.

Operations superintendents and contractor supervisors are provided this Plan, and receive additional training with respect to the requirements outlined in this Plan. In addition, supervising level staff and sub-contractors are provided the Operational Environmental Standards (found in the Project's Environmental Protection Plan) as a written guidance for their work.

Targeted environmental awareness training will be provided to both individuals and groups of workers assuming a specific authority or responsibility for environmental management or those undertaking an activity with an elevated high risk of environmental impact. These will be delivered in the form of toolbox meetings or other means as appropriate.

The content of the environmental component of the site orientation will include at a minimum:

a. Location of environmental sensitivities;
b. Location of additional information on environmental matters;
c. Due diligence responsibilities;
d. Responsibilities related to waste management, minimizing noise as necessary, road traffic rules, etc.; and,
e. Principles and necessary steps to avoid encounters with bears or other wildlife and what to do if one such encounter occurs.

12.5 COMMUNICATION

The types of communications for which members of the team will participate include the following:

a. Formal written correspondence and meetings with stakeholders;
b. Site visits by community representatives;
c. Design, construction and planning meetings;
d. Field inspections and monitoring reports disseminated by the Environmental Superintendent;
e. Electronic communications;
f. Toolbox meetings;
g. Formal written correspondence and meetings with government regulatory bodies; and,
h. Formal environmental awareness training.

Communications are appropriately recorded and filed for future reference. Where appropriate, copies of communications will be forwarded to Senior Management and the Environmental Superintendent.

The information contained herein is proprietary Baffinland Iron Mines Corporation and is used solely for the purpose for which it is supplied.
It shall not be disclosed in whole or in part, to any other party, without the express permission in writing by Baffinland Iron Mines Corporation.

Note: This is an UNCONTROLLED COPY. All staff members are responsible to ensure the latest revision is used.

12.6 EXTERNAL COMMUNICATIONS

Effective forms of communication include the proactive notification to external stakeholders of Project activity. Project activity updates will be provided to the communities of North Baffin through various means including regular meetings, public notices and radio announcements as appropriate. Baffinland employs Community Liaison Offices to assist in this regard.

The information contained herein is proprietary Baffinland Iron Mines Corporation and is used solely for the purpose for which it is supplied.
It shall not be disclosed in whole or in part, to any other party, without the express permission in writing by Baffinland Iron Mines Corporation.

Note: This is an UNCONTROLLED COPY. All staff members are responsible to ensure the latest revision is used.

Appendix A – Sustainable Development Policy, and Health, Safety and Environment Policy

The information contained herein is proprietary Baffinland Iron Mines Corporation and is used solely for the purpose for which it is supplied.
It shall not be disclosed in whole or in part, to any other party, without the express permission in writing by Baffinland Iron Mines Corporation.

Note: This is an UNCONTROLLED COPY. All staff members are responsible to ensure the latest revision is used.

Baffinland Iron Mines Corporation

Health, Safety and Environment Policy

BAF-PH1-800-POL-0001

Rev 3

Approved by: **Brian Penney**

Title: **Chief Executive Officer**

Date: **May 3rd, 2019**

Signature: 

The information contained herein is proprietary to Baffinland Iron Mines Corporation and is used solely for the purpose for which it is supplied.
It shall not be disclosed in whole or in part, to any other party, without the express permission in writing by Baffinland Iron Mines Corporation.

Note: This is an UNCONTROLLED COPY. All staff members are responsible to ensure the latest revision is used.

DOCUMENT REVISION RECORD

Issue Date MM/DD/YY	Revision	Prepared By	Approved By	Issue Purpose
05/07/15	0	EM	TP	For Use
03/07/16	1	JS	BP	Minor edits
04/20/18	2	TS	SA/BP	Minor edits
05/03/19	3	TS	BP	Minor edits

The information contained herein is proprietary to Baffinland Iron Mines Corporation and is used solely for the purpose for which it is supplied.
It shall not be disclosed in whole or in part, to any other party, without the express permission in writing by Baffinland Iron Mines Corporation.

Note: This is an UNCONTROLLED COPY. All staff members are responsible to ensure the latest revision is used.

This Baffinland Iron Mines Corporation Policy on Health, Safety and Environment is a statement of our commitment to achieving a safe, healthy and environmentally responsible workplace. We will not compromise this policy for the achievement of any other organizational goals.

We implement this Policy through the following commitments:

- Continual improvement of safety, occupational health and environmental performance
- Meeting or exceeding the requirements of regulations and company policies
- Integrating sustainable development principles into our decision-making processes
- Maintaining an effective Health, Safety and Environmental Management System
- Sharing and adopting improved technologies and best practices to prevent injuries, occupational illnesses and environmental impacts
- Engaging stakeholders through open and transparent communication.
- Efficiently using resources, and practicing responsible minimization, reuse, recycling and disposal of waste.
- Reclamation of lands to a condition acceptable to stakeholders.

Our commitment to provide the leadership and action necessary to accomplish this policy is exemplified by the following principles:

- As evidenced by our motto “Safety First, Always” and our actions Health and Safety of personnel and protection of the environment are values not priorities.
- All injuries, occupational illnesses and environmental impacts can be prevented.
- Employee involvement and active contribution through courageous leadership is essential for preventing injuries, occupational illnesses and environmental impacts.
- Working in a manner that is healthy, safe and environmentally sound is a condition of employment.
- All operating exposures can be safeguarded.
- Training employees to work in a manner that is healthy, safe and environmentally sound is essential.
- Prevention of personal injuries, occupational illnesses and environmental impacts is good business.
- Respect for the communities in which we operate is the basis for productive relationships.

The information contained herein is proprietary to Baffinland Iron Mines Corporation and is used solely for the purpose for which it is supplied.
It shall not be disclosed in whole or in part, to any other party, without the express permission in writing by Baffinland Iron Mines Corporation.

Note: This is an UNCONTROLLED COPY. All staff members are responsible to ensure the latest revision is used.

We have a responsibility to provide a safe workplace and utilize systems of work to meet this goal. All employees must be clear in understanding the personal responsibilities and accountabilities in relation to the tasks we undertake.

The health and safety of all people working at our operation and responsible management of the environment are core values to Baffinland. In ensuring our overall profitability and business success every Baffinland and business partner employee working at our work sites is required to adhere to this Policy.



Brian Penney
Chief Executive Officer
May 2019

The information contained herein is proprietary to Baffinland Iron Mines Corporation and is used solely for the purpose for which it is supplied.
It shall not be disclosed in whole or in part, to any other party, without the express permission in writing by Baffinland Iron Mines Corporation.

Note: This is an UNCONTROLLED COPY. All staff members are responsible to ensure the latest revision is used.

Baffinland Iron Mines Corporation

SUSTAINABLE DEVELOPMENT POLICY

BAF-PH1-800-POL-0002

Rev 1

Approved By: Brian Penney
Title: Chief Executive Officer
Date: March 7, 2016
Signature:

The information contained herein is proprietary to Baffinland Iron Mines Corporation and is used solely for the purpose for which it is supplied. It shall not be disclosed in whole or in part to any other party, without the express permission in writing by Baffinland Iron Mines Corporation.

Note: This is an UNCONTROLLED COPY. All staff members are responsible to ensure the latest revision is used.

DOCUMENT REVISION RECORD

Issue Date MM/DD/YY	Revision	Prepared By	Approved By	Issue Purpose
05/07/15	0	EM	TP	For Use
03/07/16	1	JS	BP	Minor edits

The information contained herein is proprietary to Baffinland Iron Mines Corporation and is used solely for the purpose for which it is supplied. It shall not be disclosed in whole or in part to any other party without the express permission in writing by Baffinland Iron Mines Corporation.

Note: This is an UNCONTROLLED COPY. All staff members are responsible to ensure the latest revision is used.

At Baffinland Iron Mines Corporation (Baffinland), we are committed to conducting all aspects of our business in accordance with the principles of sustainable development & corporate responsibility and always with the needs of future generations in mind. Baffinland conducts its business in accordance with the Universal Declaration of Human Rights and ArcelorMittal's Human Rights Policy which applies to all employees and affiliates globally.

Everything we do is underpinned by our responsibility to protect the environment, to operate safely and fiscally responsibly and with utmost respect for the cultural values and legal rights of Inuit. We expect each and every employee, contractor, and visitor to demonstrate courageous leadership in personally committing to this policy through their actions. The Sustainable Development and Human Rights Policy is communicated to the public, all employees and contractors and it will be reviewed and revised as necessary on a regular basis. These four pillars form the foundation of our corporate responsibility strategy:

1. Health and Safety
2. Environment
3. Upholding Human Rights of Stakeholders
4. Transparent Governance

1.0 HEALTH AND SAFETY

- We strive to achieve the safest workplace for our employees and contractors; free from occupational injury and illness, where everyone goes home safe everyday of their working life. Why? Because our people are our greatest asset. Nothing is as important as their health and safety. Our motto is "Safety First, Always".
- We report, manage and learn from injuries, illnesses and high potential incidents to foster a workplace culture focused on safety and the prevention of incidents.
- We foster and maintain a positive culture of shared responsibility based on participation, behaviour, awareness and promoting active courageous leadership. We allow our employees and contractors the right to stop any work if and when they see something that is not safe.

2.0 ENVIRONMENT

- Baffinland employs a balance of the best scientific and traditional Inuit knowledge to safeguard the environment.
- Baffinland applies the principles of pollution prevention, waste reduction and continuous improvement to minimize ecosystem impacts, and facilitate biodiversity conservation.
- We continuously seek to use energy, raw materials and natural resources more efficiently and effectively. We strive to develop more sustainable practices.
- Baffinland ensures that an effective closure strategy is in place at all stages of project development to ensure reclamation objectives are met.

The information contained herein is proprietary to Baffinland Iron Mines Corporation and is used solely for the purpose for which it is supplied.
It shall not be disclosed in whole or in part, to any other party, without the express permission in writing by Baffinland Iron Mines Corporation.

Note: This is an UNCONTROLLED COPY. All staff members are responsible to ensure the latest revision is used.

3.0 UPHOLDING HUMAN RIGHTS OF STAKEHOLDERS

- We respect human rights, the dignity of others and the diversity in our workforce. Baffinland honours and respects the unique cultural values and traditions of Inuit.
- Baffinland does not tolerate discrimination against individuals on the basis of race, colour, gender, religion, political opinion, nationality or social origin, or harassment of individuals freely employed.
- Baffinland contributes to the social, cultural and economic development of sustainable communities in the North Baffin Region.
- We honour our commitments by being sensitive to local needs and priorities through engagement with local communities, governments, employees and the public. We work in active partnership to create a shared understanding of relevant social, economic and environmental issues, and take their views into consideration when making decisions.
- We expect our employees and contractors, as well as community members, to bring human rights concerns to our attention through our external grievance mechanism and internal human resources channels. Baffinland is committed to engaging with our communities of interest on our human rights impacts and to reporting on our performance.

4.0 TRANSPARENT GOVERNANCE

- Baffinland will take steps to understand, evaluate and manage risks on a continuing basis, including those that may impact the environment, employees, contractors, local communities, customers and shareholders.
- Baffinland endeavours to ensure that adequate resources are available and that systems are in place to implement risk-based management systems, including defined standards and objectives for continuous improvement.
- We measure and review performance with respect to our safety, health, environmental, socio-economic commitments and set annual targets and objectives.
- Baffinland conducts all activities in compliance with the highest applicable legal & regulatory requirements and internal standards.
- We strive to employ our shareholder's capital effectively and efficiently and demonstrate honesty and integrity by applying the highest standards of ethical conduct.

4.1 FURTHER INFORMATION

Please refer to the following policies and documents for more information on Baffinland's commitment to operating in an environmentally and socially responsible manner:

Health, Safety and Environment Policy
Workplace Conduct Policy
Inuktitut in the Workplace Policy
Site Access Policy
Hunting and Fishing (Harvesting) Policy
Annual Report to Nunavut Impact Review Board

The information contained herein is proprietary to Baffinland Iron Mines Corporation and is used solely for the purpose for which it is supplied. It shall not be disclosed in whole or in part, to any other party, without the express permission in writing by Baffinland Iron Mines Corporation.

Note: This is an UNCONTROLLED COPY. All staff members are responsible to ensure the latest revision is used.

ArcelorMittal Canada Sustainability and Corporate Responsibility Report

If you have questions about Baffinland's commitment to upholding human rights, please direct them to contact@baffinland.com.

Brian Penney
Chief Executive Officer
March 2016

The information contained herein is proprietary to Baffinland Iron Mines Corporation and is used solely for the purpose for which it is supplied.
It shall not be disclosed in whole or in part, to any other party, without the express permission in writing by Baffinland Iron Mines Corporation.

Note: This is an UNCONTROLLED COPY. All staff members are responsible to ensure the latest revision is used.

Appendix B - Table of Concordance with Type A Water Licence Terms and Conditions

The information contained herein is proprietary Baffinland Iron Mines Corporation and is used solely for the purpose for which it is supplied.
It shall not be disclosed in whole or in part, to any other party, without the express permission in writing by Baffinland Iron Mines Corporation.

Note: This is an UNCONTROLLED COPY. All staff members are responsible to ensure the latest revision is used.

Table A-1 shows the Part, number and Condition of the Type A Water Licence and the location where the condition is located within the Freshwater Supply, Sewage and Wastewater Management Plan.

TABLE A-1: CONCORDANCE TABLE - TYPE A WATER LICENCE 2AM-MRY1325 AMENDMENT NO 1

Part	Number	Condition	Section/Commitment
B	11	The Licensee shall post signs in the appropriate areas to inform the public of the location of infrastructure and/or facilities designed to contain, withhold, divert or retain Water and/or Waste. All signs must be in English, Inuktitut, and French.	Signage, written in English, Inuktitut, and French, will be posted inform the public of the location of infrastructure and/or facilities designed to contain, withhold, divert or retain Water and/or Waste.
D	2	The Licensee shall submit to the Board for review and acceptance, at least sixty (60) days prior to construction or in a timeframe otherwise approved by the Board in writing, final design and for-construction drawings, stamped and signed by a Professional Engineer, for all infrastructure and/or facilities designed to contain, withhold, divert or retain Water and/or Waste, as authorized under the Licence.	60 days prior to construction. If more immediate timeline required, Baffinland will issue letter to NWB with early drawings.

The information contained herein is proprietary Baffinland Iron Mines Corporation and is used solely for the purpose for which it is supplied.
It shall not be disclosed in whole or in part, to any other party, without the express permission in writing by Baffinland Iron Mines Corporation.

Note: This is an UNCONTROLLED COPY. All staff members are responsible to ensure the latest revision is used.

	17	The Licensee shall submit a Construction Summary Report to the Board, within ninety (90) days following the completion of any structure designed to contain, withhold, divert or retain Waters or Wastes, as authorized by the Board. The construction summary report shall be prepared by an Engineer(s) in accordance with Schedule D, Item 1.	90 days following the completion of any structure designed to contain, withhold, divert or retain Waters or Wastes, as authorized by the Board.
D	23	The Licensee shall construct and operate all infrastructure and Facilities authorized by the Board that are designed to contain, withhold, divert or retain Water and/or Waste, in accordance with all applicable legislation and industry standards.	Demonstrated and outlined by this Plan.
E	3	The Licensee shall obtain all fresh Water for domestic camp use and industrial purposes, during the Construction Phase of the Project, in amounts and from the sources described in Table 2, or from sources otherwise approved by the Board in writing. In addition to the source-specific limits prescribed in Table 2, the Licensee is authorized to use up to one thousand eight hundred and eighty-eight (1,888) cubic metres of Water per day, to a maximum of six hundred and eighty-nine thousand (689,000) cubic metres of Water annually, during the Construction Phase of the Project. **Table 2: Water Use Authorized for Domestic and Industrial Purposes during Project Construction Phase** **Site** / **Source** / **Volume (m^3/day)** / **Combined Volume (m^3/year)** Milne Port (Milne Inlet) — Phillips Creek (summer); Km 32 Lake (winter) — 367.5 — ~ 134,000 Mine Site (Mary River) — Camp Lake — 657.5 — 240,000 SteensbyPort (Steensby Inlet) — ST 347 Km Lake; 3 km Lake — 435.8 — 155,400 Ravn River — Camp Lake — 145.2 — Mid-Rail — Nivek Lake (summer); Ravn Camp Lake (winter) — 79.5 — Cockburn North (Tunnels Camp) — Cockburn Lake — 101.4 — Cockburn South Camp — Cockburn Lake — 111.1 — **Annual Total** — **~ 689,000 m^3/Annually**	Table 4-1
E	5	The Licensee may recycle water and use reclaimed water from the various Treatment Facilities, surface water management ponds and embankment dams and approved discharge locations under the licence if such waters meet appropriate discharge criteria for those facilities.	5.2

The information contained herein is proprietary Baffinland Iron Mines Corporation and is used solely for the purpose for which it is supplied.
It shall not be disclosed in whole or in part, to any other party, without the express permission in writing by Baffinland Iron Mines Corporation.

Note: This is an UNCONTROLLED COPY. All staff members are responsible to ensure the latest revision is used.

E	6	The Licensee shall equip all Water intake hoses with screens of an appropriate mesh size, consistent with the requirements of Fisheries and Ocean Canada's (DFO) Freshwater Intake End-of-Pipe Fish Screen Guidelines (1995), to prevent the entrainment of fish are and shall withdraw Water at a rate such that fish do not become impinged on the screen.	4.1.1.2
E	8	Streams cannot be used as a water source unless authorized and approved by the Board in writing.	4.2
E	9	The Licensee shall notify the Inspector and the Board at least ten (10) days in advance of using Water from any sources not identified in the Application or requiring approval as per Part E, Item 8.	10 days in advance of using Water from any sources not identified in the Application or requiring approval.
E	10	The Licensee shall update or revise annually following the commencement of the Operations Phase and/or the Early Revenue Phase, the Project Blockflow Diagram Water Supply Balance information for the various Project sites, provided with the Application and submit for review of the Board. The submission shall be included with the Annual Report under Part B, Item 4.	The Plan is updated to include the planned construction numbers as well as the current Work Plan. Updates will be provided as required to include the Operations Phase.
E	11	The Licensee shall carry out weekly inspections of all structures designed to contain, withhold, divert or retain Waters or Wastes during periods of flow and maintain records of the inspections and findings, for review upon the request by the Board or an Inspector.	8
E	12	The Licensee shall not remove any material from below the ordinary High Water Mark of any water body unless authorized.	4.2
E	25	The Licensee is authorized to withdraw up to 1,500 m3 / day to a maximum of 547,500 m3 annually of Water specifically for use in dust suppression or control along the Tote Road during the Early Revenue Phase (ERP) of the Project. Water for dust suppression or control shall be obtained from the sources in accordance with thresholds established in Table 2-3.	Table 4-2

The information contained herein is proprietary Baffinland Iron Mines Corporation and is used solely for the purpose for which it is supplied.
It shall not be disclosed in whole or in part, to any other party, without the express permission in writing by Baffinland Iron Mines Corporation.

Note: This is an UNCONTROLLED COPY. All staff members are responsible to ensure the latest revision is used.

<table>
<tr><td></td><td></td><td>
Table 2-3: Water use Authorized for Dust Suppression
<table>
<tr><th>Site</th><th>Source</th><th>Prosed Maximum Volume (m^3/day)</th><th>Restriction</th></tr>
<tr><td rowspan="12">Tote Road</td><td>Phillip's Creek</td><td>212</td><td rowspan="3">None</td></tr>
<tr><td>Km 32 Lake</td><td>364</td></tr>
<tr><td>CV128</td><td>579.5</td></tr>
<tr><td>CV099</td><td>110</td><td rowspan="3">June –July only during low flow(less than mean flow) years</td></tr>
<tr><td>CV087</td><td>90</td></tr>
<tr><td>CV078</td><td>75</td></tr>
<tr><td>Katiktok Lake</td><td>318</td><td rowspan="2">None</td></tr>
<tr><td>BG50</td><td>150</td></tr>
<tr><td>BG32</td><td>120</td><td>June –July only during low flow(less than mean flow) years</td></tr>
<tr><td>CV217</td><td>130</td><td rowspan="2">None</td></tr>
<tr><td>Muriel Lake</td><td>212</td></tr>
<tr><td>David Lake</td><td>132</td><td>June –July only during low flow(less than mean flow) years</td></tr>
<tr><td>BG17</td><td>75</td><td></td></tr>
<tr><td>CV233 (Tom River)</td><td>135</td><td rowspan="2">None</td></tr>
<tr><td>Camp Lake</td><td>86</td></tr>
</table>
</td><td></td></tr>
<tr><td>E</td><td>26</td><td>The Licensee shall obtain authorization from the Board in writing prior to using Water authorized under Part E, Item 25, for purposes other than that authorized in Part E, Item 25.</td><td>4.2</td></tr>
<tr><td>F</td><td>9</td><td>The Licensee shall treat oily water and wastewater generated by the Project at the Oily Water/Wastewater Treatment Facilities authorized under the scope of the Licence.</td><td>6.3</td></tr>
<tr><td>F</td><td>11</td><td>The Licensee shall provide at least ten (10) days' notice to the Inspector prior to planned Discharges from any Waste Management Facility, Oily Water/Wastewater Treatment Facilities, Sewage Treatment Facilities, and any other relevant facilities associated with the Project. The notice shall include the estimated volume proposed for Discharge and the location and description of the receiving environment.</td><td>10 days prior to the commencement of any treated effluent discharge.</td></tr>
<tr><td>F</td><td>12</td><td>The Licensee shall, unless otherwise approved by the Board in writing, discharge effluent at a distance of least thirty-one (31) metres above the Ordinary High Water Mark of any Water body, where direct flow into the Water body is not possible, such that surface erosion is minimized and no additional impacts are created.</td><td>Section 5.3</td></tr>
<tr><td>F</td><td>14</td><td>The Licensee shall direct all Sewage generated from the relevant Project sites to the Sewage Treatment Facilities or as otherwise approved by the Board in writing.</td><td>5.2</td></tr>
<tr><td>F</td><td>15</td><td>The Licensee shall treat all Sewage waste generated at the Ravn River and Mid-Rail camps and Sewage generated at the Cockburn North and Cockburn South camps at either the Mine Site Sewage Treatment Facility or the Steensby Port Sewage Treatment Facility, unless otherwise approved by the Board in writing.</td><td>Appendix E</td></tr>
</table>

The information contained herein is proprietary Baffinland Iron Mines Corporation and is used solely for the purpose for which it is supplied.
It shall not be disclosed in whole or in part, to any other party, without the express permission in writing by Baffinland Iron Mines Corporation.

Note: This is an UNCONTROLLED COPY. All staff members are responsible to ensure the latest revision is used.

<table>
<tr><td>F</td><td>16</td><td>The Licensee shall provide to the Board for review, at least sixty (60) days prior to installation, detailed specifications and operational requirements for the Sewage storage tanks proposed for the Railway camps.</td><td>60 days prior to installation</td></tr>
<tr><td>F</td><td>17</td><td>All discharge from the Sewage Treatment Facilities including the Polishing Waste Stabilization Ponds directly into fresh Water bodies at Monitoring Stations MP-01, MP-01a, MP-MRY-04, MP-MRY-04a, MS-01, MS-01a, MS-MRY-04, MS-MRY-04a, and/or from monitoring stations as otherwise approved by the Board in writing, must not exceed the following Effluent quality limits:
Table 4: Effluent Quality Discharge Limits for Sewage Treatment Facilities to Freshwater Receiving Environment
<table><tr><th>Parameter</th><th>Maximum Concentration of Any Grab Sample (mg/L)</th></tr><tr><td>BOD_5</td><td>30</td></tr><tr><td>Total Suspended Solids</td><td>35</td></tr><tr><td>Faecal Coliform</td><td>1000 CFU/100 mL</td></tr><tr><td>Oil and Grease</td><td>No visible sheen</td></tr><tr><td>pH</td><td>Between 6.0 and 9.5</td></tr><tr><td>Ammonia (NH3-N)</td><td>4.0</td></tr><tr><td>Total Phosphorous (MS-01)</td><td>4.0</td></tr><tr><td>Total Phosphorous (MS-01a)</td><td>1.0</td></tr><tr><td>Toxicity</td><td>Not acutely toxic</td></tr></table>(Note that treated effluent discharge from MP-01 and MP-01a is directed to the ocean, therefore ocean discharge criteria (F18) would therefore apply)</td><td>Table 5-2</td></tr>
<tr><td>F</td><td>18</td><td>All discharge from the Sewage Treatment Facilities including the Polishing Waste Stabilization Ponds at Monitoring Stations SP-01, SP-01a, and/or from monitoring stations as otherwise approved by the Board in writing, directly into the ocean or to ditches flowing into the ocean shall not exceed the following Effluent quality limits:
Table 5: Effluent Quality Discharge Limits for Sewage Treatment Facilities to the Ocean
<table><tr><th>Parameter</th><th>Maximum Concentration of Any Grab Sample (mg/L)</th></tr><tr><td>BOD_5</td><td>100</td></tr><tr><td>Total Suspended Solids</td><td>120</td></tr><tr><td>Faecal Coliform</td><td>10,000 CFU/100 mL</td></tr><tr><td>Oil and Grease</td><td>No visible sheen</td></tr><tr><td>pH</td><td>Between 6.0 and 9.5</td></tr><tr><td>Toxicity</td><td>Not acutely toxic</td></tr></table>(Note that treated effluent discharge from MP-01 and MP-01a is directed to the ocean, therefore the above ocean discharge criteria are applied for these locations)</td><td>Table 5-2</td></tr>
<tr><td>F</td><td>19</td><td>Sludge generated from the Sewage Treatment Facilities or any other facilities shall be confirmed to be non-hazardous and the results provided to the Board for review prior to disposal at any Landfill Facility or as otherwise approved by the Board in writing.</td><td>5.2</td></tr>
</table>

The information contained herein is proprietary Baffinland Iron Mines Corporation and is used solely for the purpose for which it is supplied.
It shall not be disclosed in whole or in part, to any other party, without the express permission in writing by Baffinland Iron Mines Corporation.

Note: This is an UNCONTROLLED COPY. All staff members are responsible to ensure the latest revision is used.

<table>
<tr><td>F</td><td>20</td><td>All discharge from the Oily Water/Wastewater Treatment Facilities at Monitoring Stations MP-02, MS-02, SP-02 must not exceed the following Effluent quality limits:
Table 6: Effluent Quality Discharge Limits for Oily Water Treatment Facilities
<table><tr><th>Parameter</th><th>Maximum Concentration of Any Grab Sample (mg/L)</th></tr><tr><td>pH</td><td>Between 6.0 and 9.5</td></tr><tr><td>TSS</td><td>35</td></tr><tr><td>Ammonia</td><td>4.0</td></tr><tr><td>Phosphorous</td><td>4.0</td></tr><tr><td>Benzene</td><td>0.370</td></tr><tr><td>Ethylbenzene</td><td>0.090</td></tr><tr><td>Toluene</td><td>0.002</td></tr><tr><td>Oil and Grease</td><td>15 and no visible sheen</td></tr><tr><td>Arsenic</td><td>0.50</td></tr><tr><td>Copper</td><td>0.30</td></tr><tr><td>Lead</td><td>0.20</td></tr><tr><td>Nickel</td><td>0.50</td></tr><tr><td>Zinc</td><td>0.50</td></tr></table></td><td>Table 6-1</td></tr>
<tr><td>F</td><td>21</td><td>All discharge from the Landfill Facilities at Monitoring Stations MS-MRY-13a, MS-MRY-13b and SP-08 must not exceed the following Effluent quality limits:
Table 7: Effluent Quality Discharge Limits for the Landfill Facilities
<table><tr><th>Parameter</th><th>Maximum Concentration of Any Grab Sample (mg/L)</th></tr><tr><td>pH</td><td>Between 6.0 and 9.5</td></tr><tr><td>Total As</td><td>0.5</td></tr><tr><td>Total Cu</td><td>0.3</td></tr><tr><td>Total Pb</td><td>0.2</td></tr><tr><td>Total Ni</td><td>0.5</td></tr><tr><td>Total Zn</td><td>0.5</td></tr><tr><td>Total Suspended Solids</td><td>15</td></tr><tr><td>Oil and Grease</td><td>No visible sheen</td></tr></table></td><td>Table 5-4</td></tr>
<tr><td>F</td><td>22</td><td>All discharge from the Bulk Fuel Storage Facilities at Monitoring Stations MP-03, MP-MRY-7, MS-03, MS-04, MS-MRY-6, SP-04 and SP-05 must not exceed the following Effluent quality limits:
Table 8: Effluent Quality Discharge Limits for the Bulk Fuel Storage Facilities
<table><tr><th>Parameter</th><th>Maximum Concentration of Any Grab Sample (ug/L)</th></tr><tr><td>Benzene</td><td>370</td></tr><tr><td>Toluene</td><td>2</td></tr><tr><td>Ethylbenzene</td><td>90</td></tr><tr><td>Lead</td><td>1</td></tr><tr><td>Oil and Grease</td><td>15,000 and no visible sheen</td></tr></table></td><td>Table 5-5</td></tr>
</table>

The information contained herein is proprietary Baffinland Iron Mines Corporation and is used solely for the purpose for which it is supplied.
It shall not be disclosed in whole or in part, to any other party, without the express permission in writing by Baffinland Iron Mines Corporation.

Note: This is an UNCONTROLLED COPY. All staff members are responsible to ensure the latest revision is used.

<table>
<tr>
<td>F</td>
<td>23</td>
<td>All discharge from the Landfarm Facilities at Monitoring Stations MP-04, MS-05 and SP-06 must not exceed the following Effluent quality limits:

Table 9: Effluent Quality Discharge Limits for the Landfarm Facilities
<table><tr><th>Parameters</th><th>Maximum Concentration of Any Grab Sample (mg/L)</th></tr><tr><td>pH</td><td>Between 6.0 and 9.0</td></tr><tr><td>Total Suspended Solids</td><td>15</td></tr><tr><td>Oil and Grease</td><td>15 and no sheen</td></tr><tr><td>Total Lead</td><td>0.001</td></tr><tr><td>Benzene</td><td>0.370</td></tr><tr><td>Toluene</td><td>0.002</td></tr><tr><td>Ethylebenzene</td><td>0.090</td></tr></table></td>
<td>Table 5-6</td>
</tr>
<tr>
<td>F</td>
<td>24</td>
<td>All Discharge from the Bulk Sample Open Pit, Bulk Sample Weathered Ore Stockpile, Bulk Sample Processing Stockpile Area and Bulk Sample Stockpile Area Seepage and runoff from the at Milne Inlet at Monitoring Stations MS-MRY-09, MS-MRY-10, MS-MRY-11, MP-MRY-12 and/or monitoring stations as otherwise approved by the Board shall not exceed the following Effluent quality limits:

Table 10: Effluent Quality Discharge Limits for Open Pit, Stockpiles, and Sedimentation Ponds
<table><tr><th>Parameter</th><th>Maximum Concentration of Any Grab Sample (mg/L)</th></tr><tr><td>Total Arsenic</td><td>0.50</td></tr><tr><td>Total Copper</td><td>0.30</td></tr><tr><td>Total Lead</td><td>0.20</td></tr><tr><td>Total Nickel</td><td>0.50</td></tr><tr><td>Total Zinc</td><td>0.50</td></tr><tr><td>Total Suspended Solids</td><td>15.0</td></tr><tr><td>Oil and Grease</td><td>No visible sheen</td></tr><tr><td>Toxicity</td><td>Not acutely toxic</td></tr><tr><td colspan="2">The waste discharge shall have a pH of between 6.0 and 9.5</td></tr></table></td>
<td>Table 5-7</td>
</tr>
<tr>
<td>F</td>
<td>26</td>
<td>All discharge from the Ponds associated with the Run of Mine Ore Stockpile, Ore Stockpile, West and East Sediment Ponds at Monitoring stations MS-06, MS-07, MS-08 MS-09 and SP-07 shall not exceed the Effluent quality limits of Part F, Item 25</td>
<td>5.3 and Table 5-7</td>
</tr>
</table>

The information contained herein is proprietary Baffinland Iron Mines Corporation and is used solely for the purpose for which it is supplied.
It shall not be disclosed in whole or in part, to any other party, without the express permission in writing by Baffinland Iron Mines Corporation.

Note: This is an UNCONTROLLED COPY. All staff members are responsible to ensure the latest revision is used.

Appendix C - Site Layout – Milne Port and Mine Site

The information contained herein is proprietary Baffinland Iron Mines Corporation and is used solely for the purpose for which it is supplied.
It shall not be disclosed in whole or in part, to any other party, without the express permission in writing by Baffinland Iron Mines Corporation.

Note: This is an UNCONTROLLED COPY. All staff members are responsible to ensure the latest revision is used.

503,000 503,500 504,000 504,500

7,976,500 7,976,000 7,975,500 7,975,000 7,974,500 7,974,000

Milne Inlet

ORE DOCK #1

FREIGHT DOCK

BARGE LANDING AREA

EFFLUENT DISCHARGE LOCATION

SURFACE WATER MANAGEMENT POND

SURFACE WATER MANAGEMENT POND

MARINE MANIFOLD BUILDING

MP-C-A

MP-C-H

MP-05

MP-06

MP-C-D

MP-C-E

MP-C-F

MP-03

MP-02

ORE STOCKPILE

MODULE OFFLOAD ROAD

MP-01A

MP-01

LP2

MP-C-B

WEATHERHAVEN (MATRIX CAMP)

SNOW STOCKPILE

LAND FARM FACILITY

SNOW STOCKPILE

MP-04

SNOW DUMP

SNOW STOCKPILE

Phillips Creek

W3

MP-04A

SNOW STOCKPILE

MP-C-C

W14

MP-Q1-02

MAINTENANCE BUILDING

MP-C-B01

ORE HAUL TRUCK SERVICES PAD

HELICOPTER PAD

MOBILE REFUELING MODULE

MP-01B

W10A

QUARRY Q1

W10B

380-PERSON CAMP

LP5

LP3

LP6

MP-C-J

LP7

MP-Q1-01

TOTE ROAD

TOTE ROAD (OLD ALIGNMENT)

MP-C-D

MP-C-E

HAZARDOUS WASTE BERM

MP-C-F

BULK FUEL FACILITY

WELDING SHOP

MP-03

011

TOROMONT SHOP

TK-004

TK-005

DIESEL REFUELING MODULE

MAIN MAINTENANCE BUILDING

JET-A REFUELING MODULE

TK-003

TK-006

MP-02

MOBILE MAINTENANCE FACILITIES

TK-010

TK-009

TK-007

TK-008

ROAD MAINTENANCE SHOP

TK-001

TK-002

ERT OFFICE / GARAGE

TIRE SHOP

MAIN GENERATORS

WAREHOUSE

PORT SITE COMPLEX

MP-01A

POLISHING WASTE STABILIZATION POND

MP-01

WASTE TREATMENT PLANT

ENVIRONMENTAL LAB

WASTE WATER TREATMENT PLANT

WASTE MANAGEMENT BUILDING

HAZARDOUS WASTE BERM

LAYDOWN R1

LEGEND

- Foreshore Lease Boundary
- Project Development Area
- Commercial Lease Boundary
- Borrow Area
- Quarry Area

SNP Monitoring Station

- Active
- Inactive

ᓄᓇᕗᑦ ᐅᕕᖃᐅᓕᕆᓂᖅ MARY RIVER PROJECT

Milne Port Site Layout

Projection: NAD 1983 UTM ZONE 17N.
Base Map: © 2020 Digital Global, Inc.
Imagery and Infrastructure are representative as of August 2020.

0 25 50 100 150 200 Meters

Scale 1:8,000

N

Baffinland

ᑎᑎᕋᐅᓵᕐᒪᓕᖅ FIGURE 3

SAVED: C:\Users\katie.mcguire\Documents\4 - Maps\Reporting\1_Annual\Type A\2020\BIM_Fig 3 MilnePort SNP.mxd; 22-Mar-21

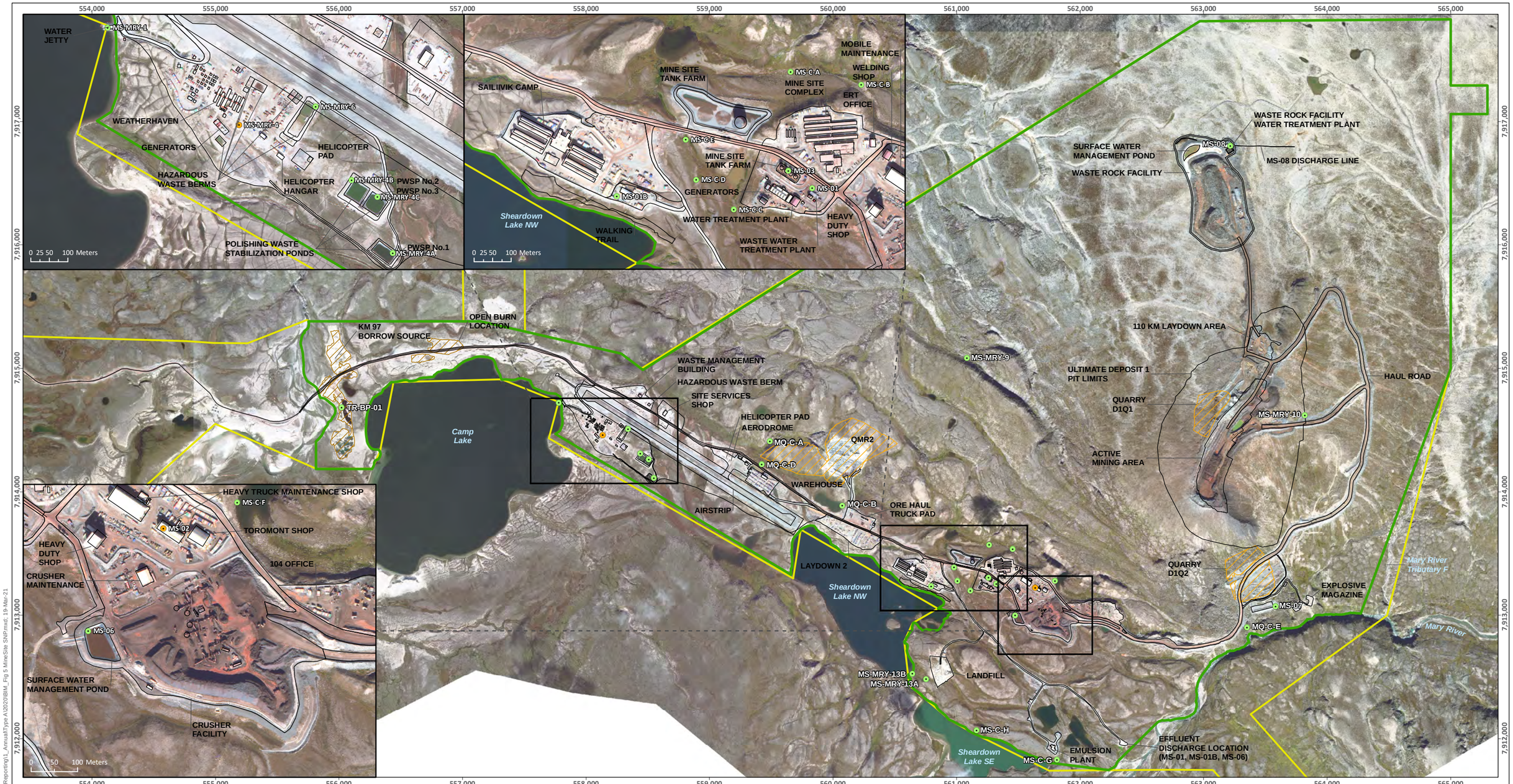

LEGEND

- Borrow Area
- Quarry Area
- Project Development Area
- Commercial Lease Boundary
- Infrastructure

SNP Monitoring Station

- Active
- Inactive

MARY RIVER PROJECT

Mine Site Layout

Projection: NAD 1983 UTM ZONE 17N.
Base Map: © 2020 Digital Global, Inc.
Imagery and Infrastructure are representative as of August 2020.

0 100 200 400 600 800 Meters
Scale 1:30,000

N

Baffinland

FIGURE 5

SAVED: C:\Users\katie.mcguire\Documents\4 - Maps\Reporting\1_Annual\Type A\2020\BIM_Fig 5 MineSite SNP.mxd; 19-Mar-21

Appendix D - Block Flow Diagrams – Milne Port and Mine Site

The information contained herein is proprietary Baffinland Iron Mines Corporation and is used solely for the purpose for which it is supplied.
It shall not be disclosed in whole or in part, to any other party, without the express permission in writing by Baffinland Iron Mines Corporation.

Note: This is an UNCONTROLLED COPY. All staff members are responsible to ensure the latest revision is used.

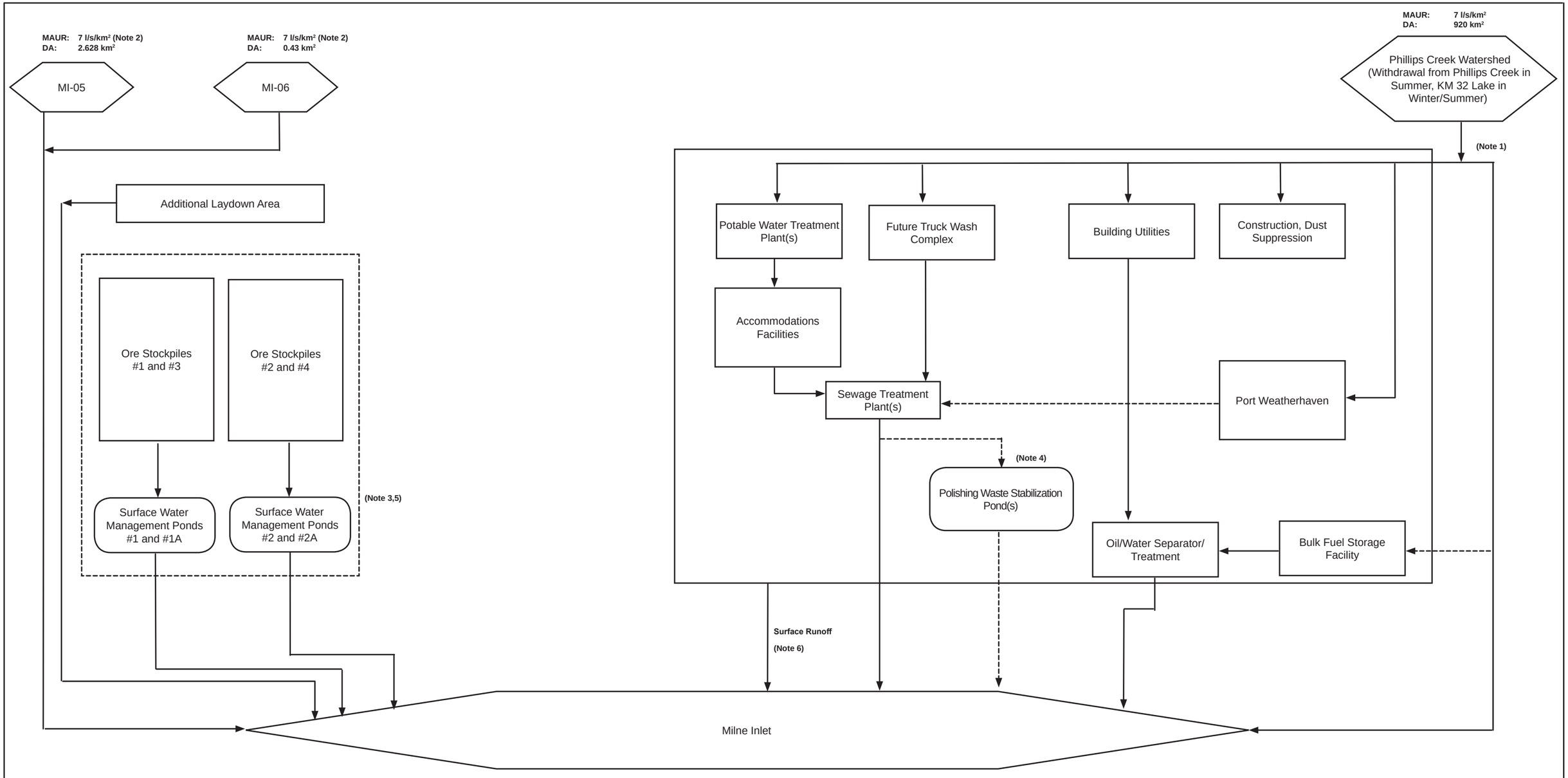

LEGEND

- Impacted Watershed
- Development Areas
- Surface Water Management Pond
- Continuous Or Watershed Flow
- Intermittent Flow
- A/AA 100,000 — Annual Volume (m^3/year)
- MAUR — Mean Annual Unit Runoff ($l/s/km^2$)
- DA — Drainage Area (km^2)

NOTES:

1) Raw water supply flow rate from Philips Creek (Summer) & KM32 Lake (Winter/Summer) are currently equal to or less than Type A water license 2AM-MRY1325 Amendment No. 1 flow rate limit of 367.5 m^3/day (134,000 m^3/year).
2) Mean Annual Unit Runoff (MAUR) in watersheds MI-05 and MI-06 likely range between 5 and 7.1/s/km^2. Part of the MI-06 natural catchment will be used for proposed infrastructure construction.
3) Ore stockpiles receive only precipitation and no surface water runoff from surrounding areas.
4) Use of Polishing Waste Stabilization Pond(s) will occur on a contingency basis only, should off-spec treated sewage effluent be produced.
5) Per Hatch Project Memo H349000-2133-10-220-0001, the runoff coefficient from ore stockpiles is zero and only road and pad runoff reports to surface water management ponds.
6) Plant site receives only precipitation-runoff and no surface water runoff from surrounding areas.

REV	DATE	DESCRIPTION	PREP'D	RVW'D
0	26MAR'19	ISSUED WITH TRANSMITTAL	SEF	RAC

BAFFINLAND IRON MINES CORPORATION

MARY RIVER PROJECT

MILNE PORT
SITE WATER BALANCE - BLOCK FLOW DIAGRAM

Baffinland

PA NO.	REF. NO.
NB102-181/54	NB19-00251

FIGURE A.1 REV 0

MAUR: 9 l/s/km²
DA: 9 km²
MR-08

MAUR: 8.5 l/s/km²
DA: 8.4 km²
MR-10

Waste Rock Facility

Surface Water Management Pond

Waste Rock Facility Water Treatment Plant

MAUR: 6.5 l/s/km²
DA: 8.2 km²
MR-16

MAUR: 9 l/s/km²
DA: 3.1 km²
MR-17

MAUR: 9.7 l/s/km²
DA: 15 km²
MR-12

Ore Crushing Facility

Run of Mine Facility

Surface Water Management Pond

Surface Water Management Pond

MAUR: 8.0 l/s/km²
DA: 5.6 km²
MR-09

Sewage Treatment Plant(s)

Surface Runoff
(NOTE 5)

(NOTE 2)

Polishing Waste Stabilization Pond(s)

Sheardown Lake

Mary River

MAUR: 11.1 l/s/km²
DA: 240 km²

Accommodation Facilities

Potable Water Treatment Plant(s)

Construction, Dust, Suppression, Truck Wash

Bulk Fuel Storage Facility

(NOTE 3)

Utility Buildings

Oil/Water Separator Treatment

Camp Lake

(NOTE 1)

MAUR: 8.5 l/s/km²
DA: 23 km²
(CAMP LAKE)

MAUR: 9.4 l/s/km²
DA: 690 km²

Mary Lake

MAUR: 11.1 l/s/km²
DA: 270.0 km²

Mary River at MR-16 Confluence

LEGEND

- Impacted Watershed
- Development Areas
- Surface Water Management Pond
- Continuous or Uncontrolled Flow
- Intermittent Flow
- A/AA 100,000 Annual Volume (m³/year)
- MAUR Mean Annual Unit Runoff (l/s/km²)
- DA Drainage Area (km²)

NOTES:

1) Raw water supply flow rate from Camp Lake are equal to or less than Type A Water Licence 2AM-MRY1325 Amendment No. 1 flow rate limit of 657.5 m³/day (240,000 m³/year) total.
2) Use of Polishing Waste Stabilization Pond and Sheardown Lake discharge will occur on a contingency basis only, should capacity be exceeded through the sewage treatment system discharging to Sheardown Lake.
3) Bulk fuel storage area runoff drained to environment if quality satisfies discharge requirements; otherwise is conveyed to oil/water separator for treatment prior to discharge.

REV	DATE	DESCRIPTION	PREP'D	RVW'D
1	29MAR'19	ISSUED WITH TRANSMITTAL	SEF	RAC

BAFFINLAND IRON MINES CORPORATION

MARY RIVER PROJECT

MINE SITE
SITE WATER BALANCE - BLOCK FLOW DIAGRAM

Baffinland

PA NO. NB102-181/54

REF. NO. NB19-00268

FIGURE A.2

REV 1

Appendix E - Sewage Treatment Plant O & M Manual

The information contained herein is proprietary Baffinland Iron Mines Corporation and is used solely for the purpose for which it is supplied.
It shall not be disclosed in whole or in part, to any other party, without the express permission in writing by Baffinland Iron Mines Corporation.

Note: This is an UNCONTROLLED COPY. All staff members are responsible to ensure the latest revision is used.

newterra
smart technology. sustainable solutions.
1325 California Avenue • P.O. Box 1517 • Brockville, ON • K6V 5W

HATCH VENDOR DATA REVIEW

Doc Number	E349000-PM009-00-118-0001	Sub	01
Date Received			

Review Grade	Next Submittal Status
☐ C1 – Proceed to next submission & status	☐ Internal Review ☐ Certified Final ☐ Final ☐ As-Built
☐ C2 – Proceed with exceptions as noted to next submission & status	Next Submittal Date:
☐ C3 – Do not proceed, revise as noted & resubmit	
No further submission required - Complete ☐	
☐ C4 – No further submission required - Cancelled ☐	
No further submission required - Superseded ☐	

Package Coordinator: Name, signature and Date:

REVIEWED ONLY FOR GENERAL CONFORMITY WITH THE SPECIFICATIONS. ACCEPTANCE BY THE ENGINEER DOES NOT WARRANT OR REPRESENT THAT THE INFORMATION CONTAINED ON THIS DRAWING/DOCUMENT IS EITHER ACCURATE OR COMPLETE. THE SOLE RESPONSIBILTY FOR CORRECT DESIGN, DETAILS & DIMENSIONS SHALL REMAIN WITH THE PARTY SUBMITTING THE DRAWING/DOCUMENT.

E349000-PM-009-00-118-0001

Sewage Treatment Plant

Operations & Maintenance Manual

newterra ltd.
1325 California Avenue, Brockville, ON K6V 5Y6
200 555 11th Ave SW, Calgary, AB, T2R 1P6
(800) 420-4056 / www.newterra.com

newterra MicroClear™ Membrane Bioreactor (MBR) Wastewater Treatment Plant

OPERATION AND MAINTENANCE MANUAL

System:	**Milne Port & Mine Site Wastewater Treatment Plants**
Location:	**Baffin Island, Nunavut**
Client:	**Baffinland Iron Mines Corporation (via Hatch)**
Project:	**300106**
Rev.:	**0**
Date:	**June, 2013**

newterra ltd.
1325 California Avenue, Brockville, ON K6V 5Y6
200 555 11th Ave SW, Calgary, AB, T2R 1P6
(800) 420-4056 / www.newterra.com

MANUAL OVERVEW

Section	Section Title	Section Description
1	**Introduction**	Introduction to **newterra** MBR WWTP O&M Manual
2	**Safety**	General personal and environmental safety information for operators serving newterra MBR WWTP.
3	**Wastewater Treatment Plant Design Basis**	**newterra** MBR WWTP Specification, Influent / Effluent Characteristics, and Prohibited Items.
4	**Plant Installation, Inspection, and Testing**	Overview of general procedures and actions followed during the plant installation, inspection and initial testing.
5	**Process Control Narrative**	Description of wastewater treatment process and equipment functionality. Control narrative & Control system touchscreen operation.
6	**System Start-Up, Operating Guidelines and Monitoring**	Overview of the plant start-up procedure & operational conditions; monitoring and testing requirements.
7	**System Maintenance**	Schedule for Routine Operation and Maintenance Checkups; membrane cleaning.
8	**Membrane Filtration Unit Shut Down**	Overview of the procedure followed during membrane filtration unit temporary and permanent shut downs; winterization procedure.
9	**Service & Support**	Information regarding the support services offered by **newterra** ltd. including start-up and emergency services; training sessions during plant commissioning.
10	**Warranty and Performance Guarantee**	General warranty statements and conditions for the membrane warranty.

© 2013 by **newterra**, ltd.
All rights reserved. No part of this document may be reproduced or transmitted in any form or by any means, electronic, mechanical, photocopying, recording, or otherwise, without prior written permission of **newterra** ltd.

newterra ltd.
1325 California Avenue, Brockville, ON K6V 5Y6
200 555 11th Ave SW, Calgary, AB, T2R 1P6
(800) 420-4056 / www.newterra.com

APPPENDICES:

Appendix A Drawings and Bill of Materials
Appendix B Packing Slip
Appendix C Testing Checklists / Pre-commissioning Test Checklist
Appendix D Spare Parts List
Appendix E Technical Specs and Brochures for Parts and Equipment
Appendix F Material Safety Data Sheets
Appendix G Glossary & Terms
Appendix H Biological Treatment & Monitoring Parameters
Appendix I Process and Chemicals Dosage Calculations
Appendix J Membrane Fouling
Appendix K newterra MicroClear™ Membrane Cleaning Log Sheet
Appendix L Alarms Troubleshooting Guide
Appendix M Process Troubleshooting Guide

© 2013 by **newterra**, ltd.
All rights reserved. No part of this document may be reproduced or transmitted in any form or by any means, electronic, mechanical, photocopying, recording, or otherwise, without prior written permission of **newterra** ltd.

newterra ltd.
1325 California Avenue, Brockville, ON K6V 5Y6
200 555 11th Ave SW, Calgary, AB, T2R 1P6
(800) 420-4056 / www.newterra.com

1.0 INTRODUCTION

The purpose of this manual is to provide necessary information for the Installation, Operation and Maintenance of the Waste Water Treatment Plant equipment.

	**The newterra MicroClear™ MBR wastewater treatment plant (WWTP) functions optimally if the operating procedures described in this manual are followed. If you have any questions after reading through this manual, please contact newterra ltd.**

- This O&M Manual must be kept on-site and available to employees at all time.
- It is IMPERATIVE that employees read the manual BEFORE working in the plant.
- Employees' must read ***Section 2*** – Health and Safety.
- Technical Support Department contacts are provided in ***Section 9***.



CAUTION: ***Once wetted, the membrane should remain wet, and not be allowed to dry out, to prevent irreversible damage to the membrane.***



WARNING: ***Failure to comply with the instructions provided in this manual can cause equipment & property damage or severe personal injury, and will render the warranty null and void.***

© 2013 by **newterra**, ltd.
All rights reserved. No part of this document may be reproduced or transmitted in any form or by any means, electronic, mechanical, photocopying, recording, or otherwise, without prior written permission of **newterra** ltd.

newterra ltd.
1325 California Avenue, Brockville, ON K6V 5Y6
200 555 11th Ave SW, Calgary, AB, T2R 1P6
(800) 420-4056 / www.newterra.com

2.0 SAFETY

2.1 Introduction

This section provides general personal and environmental safety information for newterra MBR WWTP operators.

Always refer to local codes and regulations.

Specific equipment and parts safety information can be found in Appendix E. Material Safety Data Sheets (MSDSs) include detailed information regarding health & safety of chemicals used in wastewater treatment process and are presented in Appendix F.

Information and guidelines outlined in this manual **must** be followed at all times prior to system installation and during operation and maintenance.

ESSENTIAL FOR SAFE OPERATION:

1. Installation and operation of the newterra MBR WWTP **must** only be carried out by **trained and qualified** personnel.
2. All necessary **safety precautions must** be carefully exercised, including but not limited to proper use of personal protective equipment considering given working environment and conditions.
3. All **electrical installations and troubleshooting must** only be carried out by licensed electricians.
4. All **plumbing work must** only be carried out by licensed plumbers or qualified personnel.
5. Please keep in mind that trees and shrubs taller than two meters located in close proximity to the plant buildings may become a safety concern at the time of installation or service.

DEFINITION OF SAFETY AND WARNING SIGNS USED IN THE MANUAL



ATTENTION SYMBOL

Special attention is required to ensure compliance with instructions concerning correct operating sequences to prevent damage to the plant or its function.

© 2013 by **newterra**, ltd.
All rights reserved. No part of this document may be reproduced or transmitted in any form or by any means, electronic, mechanical, photocopying, recording, or otherwise, without prior written permission of **newterra** ltd.



GENERAL WARNING SIGN

This symbol accompanies all important instructions or warnings associated with risks of injury as well as possible equipment damage.



WARNING

CRITICAL WARNING SIGN

Warns against an unsafe situation or practice associated with severe injury as well as major equipment damage.

2.1 Personal Protective Equipment (PPE)

Personal protective equipment refers to protective clothing, helmets, goggles, or other garments used to prevent injury.

The following list includes the minimum scope of PPE that should be available to newterra MBR WWTP operators:

Eye and Face Protection:

Protective glasses, goggles and face shields prevent wastewater and chemical splashes, tiny dust particles and vapors from getting in eyes and face.

Foot Protection:

Each operator should wear safety boots with steel toe and shank inserts at all times in wastewater plant operating area to protect feet from falling /rolling objects, wastewater and chemicals splashes, and electrical hazards.

Hand Protection:

Wear protective gloves at all times working in wastewater plant operating area; chemical-resistant gloves must be worn when handling chemicals

© 2013 by **newterra**, ltd.
All rights reserved. No part of this document may be reproduced or transmitted in any form or by any means, electronic, mechanical, photocopying, recording, or otherwise, without prior written permission of **newterra** ltd.

Clothing

Wear protective clothing to minimize risk of biohazards. Chemical splash apron must be worn when operator handles chemicals.

2.2 Bacterial Safety

The wastewater contains a mixture of viable bacteria and other biological organisms. A wastewater treatment plant poses a number of bacterial hazards and consequently potential health risk. Immunization protects operator against infection. The use of proper hygiene measures, protective equipment, good housekeeping and common sense prevent contact with pathogens.

These measures prevent infection!



Ensure that hands are washed with an antibacterial soap and warm water and dried by disposable towels on a regular basis, especially prior eating!

Do not expose cuts or open sores to wastewater!

Use personal protective equipment (PPE) at all times in wastewater treatment facility!

Any concern about possible infection should be brought to the attention of medical physician immediately!

2.3 Chemical Safety

The following chemicals are used in operation of newterra MBR WWTP:

- **Sodium hydroxide (NaOH)** is used for pH adjustment, in case there is a deficiency in alkalinity in influent sewage and pH drops. It is very corrosive and hazardous in case of skin/ eye contact, and ingestion.

- **Sodium hypochlorite (NaOCl)** and **Citric Acid ($C_6H_8O_7$)** are used for cleaning the membranes.

  √ **Sodium hypochlorite (NaOCl)** is a common disinfectant, which can be an irritant or corrosive, depending on its concentration. It cannot be mixed with organics, ammonia compounds or acids. ***Contact with acids produces highly toxic chlorine gas. It has to be mixed only with pure water.***

  √ **Citric Acid ($C_6H_8O_7$)** is hazardous in case of skin contact (irritant, sensitizer), or ingestion, eye contact (irritant) and inhalation (lung irritant).

© 2013 by **newterra**, ltd.
All rights reserved. No part of this document may be reproduced or transmitted in any form or by any means, electronic, mechanical, photocopying, recording, or otherwise, without prior written permission of **newterra** ltd.

When handling chemicals, it is important to wear proper personal protective equipment such as chemical goggles with combination full face shield, protective clothing with chemical splash apron and chemical-resistant rubber gloves.



The detailed information regarding health & safety of chemicals used in wastewater treatment process can be found in MSDSs presented in Appendix F of the O&M Manual Material.

2.4 Locking out Equipment

Lockout procedures must be followed prior to performing mechanical or electrical maintenance to ensure that equipment has been de-energized.

- All relevant local guidelines and procedures must be applied

2.5 Entering Confined Spaces

Confined space is defined as an area which is enclosed with limited access. The confined space:

- is large enough and so configured that an employee's body can enter and perform assigned work;
- has limited or restricted means for entry or exit; and
- is not designed for continuous employee occupancy;
- the accumulation of hazardous or toxic gases, vapor, dust, fumes, or the creation of an oxygen-deficient atmosphere may occur in confined space.

Follow local laws and regulations with respect to entering a confined space.

2.6 Vision Hazard

An Ultraviolet light (UV) unit is used in the wastewater treatment plant for final disinfection of treated effluent. Do not look directly at the blue UV lamps. Immediate or prolonged exposure to UV light can result in painful eye injury and skin burn.

© 2013 by **newterra**, ltd.
All rights reserved. No part of this document may be reproduced or transmitted in any form or by any means, electronic, mechanical, photocopying, recording, or otherwise, without prior written permission of **newterra** ltd.

2.7 Responsibility for Safety

Management:

Management is responsible for providing a safe working environment. This is accomplished partly by:

- Ensuring that all facilities and equipment are built and maintained in accordance with the appropriate safety standards
- Providing adequate funds for equipment and plant maintenance
- Establishing, promoting, and enforcing a ***safety policy***
- Establishing a safety training program
- Supplying easy accessible eyewash and first-aid stations and proper personal protective equipment (PPE) for personnel servicing wastewater treatment facility.

Worker:

- To develop a positive and professional attitude towards safety.
- To avoid mistakes caused by indifference to safety, poor work habits, lack of attentiveness, rushing the job, failure to observe established safety procedures and poor physical condition.



***Remember the "ABC" of accident prevention*:**

ALWAYS BE CAREFUL!!!

In addition to ***"being careful"*,** it is the responsibility of all workers to:

- Work in accordance with established safety procedures
- Follow the established safety rules
- Wear appropriate personal protective equipment (PPE)
- Report all accidents, no matter how minor
- Report potential safety hazards
- Participate in safety programs

© 2013 by **newterra**, ltd.
All rights reserved. No part of this document may be reproduced or transmitted in any form or by any means, electronic, mechanical, photocopying, recording, or otherwise, without prior written permission of **newterra** ltd.

newterra ltd.
1325 California Avenue, Brockville, ON K6V 5Y6
200 555 11th Ave SW, Calgary, AB, T2R 1P6
(800) 420-4056 / www.newterra.com

Plant Safety – Simple Rules to Follow



Common sense plays a very important part in the safe operation of any type of plant!

- Wear the appropriate personal protective equipment at all times.
- Keep walkways clear of snow and ice, and loose objects such as pails, shovels, tools, etc.
- Clean up spills of oil, grease, chemicals, or other substances immediately.
- Keep all tools and similar equipment clean, in good condition, and properly stored when not in use.
- Replace all manhole covers, access trap doors, etc. as soon as possible. Erect a safety barrier if it is necessary to leave the opening uncovered.
- Use the proper tools when removing or replacing a manhole cover.
- Wear a safety belt whenever there is the possibility of falling even a short distance, or when working over water.
- Lock out and tag electrical equipment before working on it or the associated equipment.
- Ensure that moving machinery is properly guarded. Wear ear protection in noisy environments.
- Ensure that fire-fighting equipment is in good working condition.

© 2013 by **newterra**, ltd.
All rights reserved. No part of this document may be reproduced or transmitted in any form or by any means, electronic, mechanical, photocopying, recording, or otherwise, without prior written permission of **newterra** ltd.

newterra ltd.
1325 California Avenue, Brockville, ON K6V 5Y6
200 555 11th Ave SW, Calgary, AB, T2R 1P6
(800) 420-4056 / www.newterra.com

Hazard Warning Signs/Symbols



© 2013 by **newterra**, ltd.
All rights reserved. No part of this document may be reproduced or transmitted in any form or by any means, electronic, mechanical, photocopying, recording, or otherwise, without prior written permission of **newterra** ltd.

newterra ltd.
1325 California Avenue, Brockville, ON K6V 5Y6
744 Gordon Baker Road, Toronto, ON M2H 3B4
(800) 420-4056 / www.newterra.com

3.0 WASTEWATER TREATMENT PLANT DESIGN BASIS

The **newterra** MBR Wastewater Treatment Plants (WWTPs) are designed for treatment of domestic wastewater from 200-m Mine Site camp with an average design flow of 72 m^3/d and 175-m Milne Port camp with an average design flow of 63 m^3/d. The wastewater treatment plants have been designed to meet the required effluent quality.

newterra MicroClear™ MBR Process Specification

Parameters	Unit	Value	
		Mine Site WWTP	Milne Port WWTP
Design Hydraulic Load			
Average Daily Flow (ADF)	m^3/d	72	63
Selected Design Flow (Q_h)	m^3/h	3	2.63
Organic Load			
COD Load	[kgCOD/d]	76.32	66.78
BOD Load	[kgBOD/d]	38.16	33.39
TKN Load	[kgTKN/d]	5.4	4.73
TAN Load	[kgTAN/d]	3.24	2.84
TP Load	[kgTP/d]	0.86	0.76
TSS Load	[kgTSS/d]	41	35.9
Process Tanks			
One (1) Equalization Tank			
Effective volume	m^3	43.5	43.5
Hydraulic Retention Time (HRT_{EQ})	h	14.5	16.5
One (1) Aeration Tank			
Effective volume	m^3	48	48
$HRT_{AEROBIC}$	h	16	18.3
Two (2) Membrane Tanks			
Total Effective Volume	m^3	5.0	5.0
$HRT_{MEMBRANE}$	h	1.7	1.9

© 2013 by **newterra**, ltd.
All rights reserved. No part of this document may be reproduced or transmitted in any form or by any means, electronic, mechanical, photocopying, recording, or otherwise, without prior written permission of **newterra** ltd.

newterra ltd.
1325 California Avenue, Brockville, ON K6V 5Y6
744 Gordon Baker Road, Toronto, ON M2H 3B4
(800) 420-4056 / www.newterra.com

Parameters	Unit	Value	
		Mine Site WWTP	Milne Port WWTP
MBR System (including aeration tank and membrane tanks)			
Overall Effective Volume	m^3	53	
Overall HRT	h	17.7	20.2
Overall SRT	d	15	16
Internal recirculation rate: Membrane tanks →Aeration tank		4 – 5x influent flow	
Average Design Flux	LMH	18	
Sludge wasting rate (at 1%, 10 g/L)	m^3/d	3.8	2.93
Minimum / maximum design operating temperature	°C	10 / 35	

MicroClear™ MB3-1 membrane module		
MCXL cassettes in each MB3-1 module	nr	15
Individual MB3-1 module filtration area	m^2	105
MB3-1 modules in each membrane tank	nr	1
Total Membrane Filtration Area in two (2) membrane tanks	m^2	210
MB3-1 Module Dimensions (L x W x H)	m	1.30 x 0.70 x 1.85
Housing materials	-	Stainless steel 1.4571 (316 Ti)

Sludge Treatment System	**Unit**	**Value**
One (1) Mixing Tank		
Effective Volume	m^3 (gal)	0.9 (240)
One (1) 6 ft^3 (expandable to 10 ft^3) 630 mm filter press		
Feed from aeration tank		
Sludge volume	m^3	2.93
Sludge concentration	%	1
Dewatered sludge dryness	%	25
Filter press daily run time		
Cycles	c/day	4
Cycle duration	h	4
Overall daily run time	h	16
Construction materials	-	Heavy duty steel skeleton, panted with two part epoxy
Polymer consumption (40 mg/L addition ratio of polymer at 0.25%)	L/d	150

© 2013 by **newterra**, ltd.
All rights reserved. No part of this document may be reproduced or transmitted in any form or by any means, electronic, mechanical, photocopying, recording, or otherwise, without prior written permission of **newterra** ltd.

newterra ltd.
1325 California Avenue, Brockville, ON K6V 5Y6
744 Gordon Baker Road, Toronto, ON M2H 3B4
(800) 420-4056 / www.newterra.com

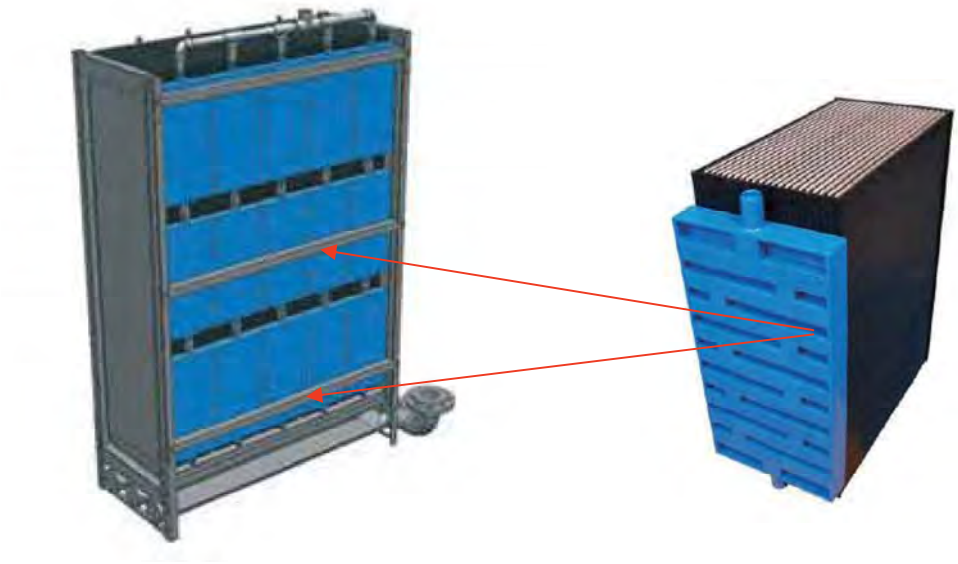

MicroClear™ MB3-1 membrane module

MicroClear™ MCXL membrane cassette

Influent Wastewater/Treated Effluent Characteristics:

Parameters	Unit	Influent Quality	Effluent Quality	
			Mine Site WWTP	Milne Port WWTP
pH	s.u.	6.0 – 9.0	6.0 – 9.5	6.0 – 9.5
Turbidity	NTU		<5	< 5
Fat, Oil, Grease (FOG)	mg/L	< 30	No visible seen	No visible seen
Chemical Oxygen Demand (COD)	mg/L	1060	-	-
Biological Oxygen Demand (BOD_5)	mg/L	530	< 10	< 20
Total Suspended Solids (TSS)	mg/L	570	< 10	< 20
Total Kjeldahl Nitrogen (TKN)	mg/L	75		-
Ammonia Nitrogen (NH_3-N)	mg/L	45	< 2	< 2
Total Phosphorus (TP)	mg/L	12	< 0.1	-
E-Coli / Fecal Coliform	CFU/100 mL		< 200*	< 200*
Alkalinity (assumed)	mg/L as $CaCO_3$	10 – 14	-	-

**After UV disinfection*

© 2013 by **newterra**, ltd.
All rights reserved. No part of this document may be reproduced or transmitted in any form or by any means, electronic, mechanical, photocopying, recording, or otherwise, without prior written permission of **newterra** ltd.

Prohibited Items

The raw wastewater should not contain any of the following substances:

- Hydrocarbons – lubricants, gasoline, diesel, etc.;
- Paints, solvents, silica, silicones and polymers;
- Antibacterial solutions, and products with quaternary ammonia;
- Large quantities of chemicals such as water softener, disinfectants, strong acids & alkalis, pesticides or photographic chemicals;
- Silicone based defoamers;
- Non-biodegradable solid waste (plastic, rubber products, disposable diapers, etc.);
- High amount of metals, such as iron, magnesium, calcium, barium and strontium.



TOXIC MATERIALS SHOULD NOT BE THROWN INTO THE DRAIN!

The raw wastewater should also comply with the following compatibility chart. The lipophilic substances concentration must be lower than **50 mg/L.**

MicroClear™ Membrane Compatibility Chart

Group	Substances	SP-Type Membrane
Chlorinated solvents	Methylene Chloride, Chloroform, Carbon Tetrachloride, Chlorobezene, Trichloroethane (<1%)	--
Esters	Ethyl Acetate, Butyl Acetate, Butyl Acrylate (<1%)	--
Ethers	Ethyl Ether, Polyethylene Oxide (<1%)	--
H_2O_2	<2000 ppm	++
Inorganic acids	HF, HCl, H_2SO_4	pH 0 - 14
Ketones	Acetone, Methyl Ethyl Ketone	--
NaOCl	100,000 ppmxh	++

© 2013 by **newterra**, ltd.
All rights reserved. No part of this document may be reproduced or transmitted in any form or by any means, electronic, mechanical, photocopying, recording, or otherwise, without prior written permission of **newterra** ltd.

newterra ltd.
1325 California Avenue, Brockville, ON K6V 5Y6
744 Gordon Baker Road, Toronto, ON M2H 3B4
(800) 420-4056 / www.newterra.com

Organic acids	Sulfamic Acid, Formic Acid, Oleic Acid, Sulfonic Acid, Acetic Acid, Acrylic Acid, Latic Acid	pH 0 - 14
Phenols		--
Silicones		--
Alcohols	Ethanol, Butanol, Isopropranol (<50%)	+
Aldehydes	Formaldehyde (<1%)	++
Alkali		pH 0 - 14
	Dimethyl Formamide, Dimethyl, Acetamid Dioxane, N-Methyl, Pyrrolidone, Tetramethyl Acetamide	--
Aprotic Solvents	Benzene, Toluene, Xylene, Anthracene, Naphatalene, Gasoline	--
Aromatic hydrocarbon	Methoxyethanol, Ethoxyethanol, Buthoxyethanol	?

(++ = Very good, + = good, - = fair, -- = not recommended)

Removal of Oily Materials

The wastewater must pass through a grease trap (or similar facility for grease/fat removal), if there is kitchen usage onsite. The large amount of oil and fat can harm treatment facility (e.g., clogging pumps and piping and cause foaming in the aeration tank). To avoid premature membrane fouling, maximum FOG concentrations should not exceed 30 mg/L.



Fats, oils and grease (FOG) must be removed prior to MBR. Removing of FOG significantly reduces membrane fouling, foaming potential and increases aeration efficiency.

© 2013 by **newterra**, ltd.
All rights reserved. No part of this document may be reproduced or transmitted in any form or by any means, electronic, mechanical, photocopying, recording, or otherwise, without prior written permission of **newterra** ltd.

newterra ltd.
1325 California Avenue, Brockville, ON K6V 5Y6
744 Gordon Baker Road, Toronto, ON M2H 3B4
(800) 420-4056 / www.newterra.com

4.0 PLANT INSTALLATION, INSPECTION, AND TESTING

The **newterra** MicroClear™ MBR WWTP is a packaged plant which comes complete with containerized inlet screen, equalization tank, post EQ screen, aeration tank, membrane tanks, UV disinfection systems and a sludge dewatering unit. The plant is housed inside multiple 40-ft modified high-cube shipping containers - completely pre-assembled, pre-piped, pre-wired and pre-tested, ready for a quick site installation and start-up. The standard containerized design also allows for modular expandability, portability and quick deployment, particularly beneficial features for work camp applications.

4.1 Site Conditions Requirements

- Installation site for the **newterra** MicroClear™ MBR WWTP should be close to the sewer drain and have a sufficient power source (refer to Electrical Drawings in **Appendix A** of this manual).

- Location must permit easy access for equipment capable of transporting, offloading, and handling of the designed loads.

- There should be adequate space around the containers for safe operation and maintenance.

- The firm base (foundation) must be built to support the full operating weight of the plant to prevent buildings from shifting and pipe/electrical conduit connection failure – pilings or rig mats are recommended (based on site conditions).



The firm base for the container must be level and must be capable of supporting the operating weight.



WARNING: ***Always check with the local utility companies for the location of water lines, electrical and telephone cables, or any additional hazards below grade, prior to excavation. Failure to do so could result in severe bodily injury or death.***

© 2013 by **newterra**, ltd.
All rights reserved. No part of this document may be reproduced or transmitted in any form or by any means, electronic, mechanical, photocopying, recording, or otherwise, without prior written permission of **newterra** ltd.

newterra ltd.
1325 California Avenue, Brockville, ON K6V 5Y6
744 Gordon Baker Road, Toronto, ON M2H 3B4
(800) 420-4056 / www.newterra.com

4.2 Inspection upon Delivery

The **newterra** MicroClear™ MBR WWTP is carefully manufactured, checked, and tested at the manufacturing plant. All equipment is pre-wired, pre-piped, mounted inside the enclosure and factory tested. Upon receiving the system, please perform the following:

- Place the containers onto the prepared firm base to avoid sagging, equipment vibration, and shifting. When lifting the container, ensure that lifting equipment is clear of overhead obstructions such as power lines, trees or rooftops. Be careful during this procedure!
- Be careful when offloading the containers to prevent damage to the internal pipe work.
- Check the containers for any signs of shipping damages.
- Inspect the containers to ensure that no components or parts are missing (refer to the **Packing Slip** presented in **Appendix B** of this manual). Also, inspect for visual damage of the tanks, pumps, blowers, piping, and control panel.
- If the containers, equipment inside and any parts shipped loose are free of damage, proceed with the installation.

For any damages or loss of equipment, **please notify newterra ltd. at (800) 420-4056 immediately.**

4.3 Plant Initial Set up

WARNING: ***The installer must ensure that the installation site is safe from hazards. These could include excavations left open overnight, debris left lying around, and tanks & equipment not properly blocked. Provisions must be made to eliminate the potential hazards by roping off and proper shoring around the excavations, cleaning up at the end of each workday, and proper storage of equipment. Failure to do so could result in severe injury or death.***

© 2013 by **newterra**, ltd.
All rights reserved. No part of this document may be reproduced or transmitted in any form or by any means, electronic, mechanical, photocopying, recording, or otherwise, without prior written permission of **newterra** ltd.

newterra ltd.
1325 California Avenue, Brockville, ON K6V 5Y6
744 Gordon Baker Road, Toronto, ON M2H 3B4
(800) 420-4056 / www.newterra.com

Enclosures Specifications

WWTP Enclosures	newterra MicroClear™ MBR WWTP consists of six (6) cMET certified, built to NEC standard enclosures
Enclosure #1 (SCREEN BLD-7903)	Room #1 - Class 1 Div 2, contains Screen Modules with Screw Screen Compactors (SCR-201/SCR-401), Screen Discharge Tanks (TNK-202/TNK-401), and pumps
	Room #2 - General Purpose (GP), contains Control Panel
Enclosure #2 (EQUALIZATION BLD-7901)	General Purpose (GP), contains Equalization Tank (TNK-301)
Enclosure #3 (AERATION BLD-7902)	General Purpose (GP), contains Aeration Tank (TNK-501)
Enclosure #4 (MBR FILTRATION BLD-7900)	General Purpose (GP), contains Membrane Tanks (TNK-601/TNK-602), scouring blowers, pumps, permeate withdrawal systems, UV system, and chemical units
Enclosure #5 (EFFLUENT BLD-7905)	General Purpose (GP), contains Effluent Tanks (TNK-811/TNK-812/TNK-813/TNK-814), pumps, and chemical units
Enclosure #6 (SLUDGE BLD-7904)	Room #1 - Class 1 Div 2, contains sludge dewatering module including Filter Press (FP=901), mixing tank (TNK-901), air , and pumps
	Room #2 - General Purpose (GP), contains pumps and blowers for aeration tank, and office space
Estimated Dry shipping weight for each enclosure	SCREEN BLD-7903 – 20 000 lb (9072 kg) EQUALIZATION BLD-7901 – 26 000 lb (11 793 kg) AERATION BLD-7902 – 28 000 lb (12 700 kg) MBR FILTRATION BLD-7900 - 23 000 lb (10 432 kg) EFFLUENT BLD-7905 - 15 000 lb (6804 kg) SLUDGE BLD-7904 – 20 000 lb (9072 kg)
Enclosures Dimensions	All enclosures are 40-ft high-cube modified shipping containers: 12.2 m L x 2.44 m W x 2.89 m H (40' L x 8' W x 9'6" H)
Influent supplied head	3.0 m (10')
Treated effluent discharged head pressure	1.5 m (5')
Inlet pipes	3" steel FNPT for wastewater from lift station; 3" steel with female camlock from sewage truck
Discharge pipe	2" steel pipe with 2" flange

© 2013 by **newterra**, ltd.
All rights reserved. No part of this document may be reproduced or transmitted in any form or by any means, electronic, mechanical, photocopying, recording, or otherwise, without prior written permission of **newterra** ltd.

newterra ltd.
1325 California Avenue, Brockville, ON K6V 5Y6
744 Gordon Baker Road, Toronto, ON M2H 3B4
(800) 420-4056 / www.newterra.com

Verify site power per system design criteria.

System Electrical Specifications:

System Power	600-V, 3-Phase, 3-Wire, 60 Hz
Main Disconnect	200 A
Panel Approval and Classification	cMET, Classified
System Approval and Classification	cMET, Classified GP & C1 Div 2
Telemetry Setup	-

Please refer to the as-built electrical drawings in Appendix A of this manual.

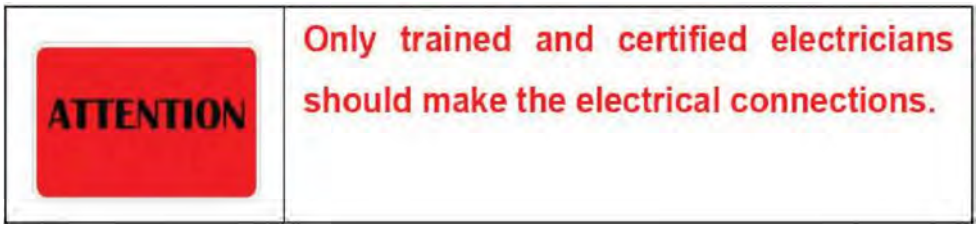

Installation Instructions:

1. Remove hatch covers from the interconnecting ports.
2. Place containers tight against each other with the interconnecting ports lining up.
3. Connect electrical power to the **Main Switch Panel** located inside the enclosure **(BLD-CONTROL)** 3 phase, 380 V from available source ensuring correct phase rotation.
4. Ensure that proper electrical grounding and lightning protection is available.
5. Switch **Main Switch Panel's isolator** to the **ON** position.
6. Check all internal lighting, heating, and ventilation for correct operation.
7. Install packed external lighting into brackets above the doorway (double man doors), route the cables to the inside of the container through the ports provided and plug into sockets provided (check for correct operation).

© 2013 by **newterra**, ltd.
All rights reserved. No part of this document may be reproduced or transmitted in any form or by any means, electronic, mechanical, photocopying, recording, or otherwise, without prior written permission of **newterra** ltd.

newterra ltd.
1325 California Avenue, Brockville, ON K6V 5Y6
744 Gordon Baker Road, Toronto, ON M2H 3B4
(800) 420-4056 / www.newterra.com

8. Ensure that a potable water supply is available (used for hydraulic testing during start-up, membrane cleaning, washing hands and for performing onsite testing).

9. **Ensure availability of an emergency eyewash station and personal protection equipment onsite.**

10. Verify membrane modules are secured within the membrane tanks – i.e. verify wheel chocks (if applicable) are in the correct location and that there is no lateral movement (less than an inch) of the membrane modules on the wheel tracks in the tanks.

4.4 Plant Initial Testing

The **newterra** MBR WWTP (except the membrane modules) undergoes electrical and leakage tests in our manufacturing facility prior to shipment; however, fittings could shift during shipment, so it is our standard practice to perform plant initial testing including **dry and hydraulic tests.**

4.4.1 Dry Test

The following tasks have to be performed **before potable water** is introduced into the system:

- Ensure that all tanks are clean and free of any dirt or debris (this is to prevent obstruction or damage to the piping, pumps, and membranes).
- Ensure that all connections have been provided and joints have been tightened.
- Check the placement of the air diffusers in the equalization tank **(TNK-301)** and aeration tank **(TNK-501)** if incorrectly positioned, proper adjustment has to be performed.
- Ensure that a functional check of the electrical and control system has been performed (please refer to the **newterra Pre-commissioning Test Checklist** presented in **Appendix C**).

4.4.2 Hydraulic Test

The hydraulic test is performed using potable water to:

- Check for and fix any leakage;
- Check the setting of level switches/transmitters;
- Check the hydraulic flow through the plant;

© 2013 by **newterra**, ltd.
All rights reserved. No part of this document may be reproduced or transmitted in any form or by any means, electronic, mechanical, photocopying, recording, or otherwise, without prior written permission of **newterra** ltd.

newterra ltd.
1325 California Avenue, Brockville, ON K6V 5Y6
744 Gordon Baker Road, Toronto, ON M2H 3B4
(800) 420-4056 / www.newterra.com

- Check if all the ancillary equipment and controls of the plant function as per design;
- Recalibrate instruments (if applicable);
- Perform clean water test on membranes.



Caution: Once wetted, the membrane should remain wet, and not be allowed to dry out to prevent irreversible damage to the membrane.

Performing the Hydraulic Test

- Fill the system [equalization tank (TNK-301) and aeration tank (TNK-501)] with potable water, run the pumps and check for any signs of leakage.
- Perform electrical and instrumentation (E&I) functional checks and adjustment of level switches.
- Turn on the air blowers B-301/B-302/B-303/B-304/B-305/B-306 for the equalization tank (TNK-301) and blowers B-501/B-502 for the aeration tank (TNK-501), and check for:
    - Buoyancy of air diffusers and if this occurs, empty the tank and fix;
    - Air leakages: if this occurs, tighten up the fittings;
    - Manually check water temperature and DO (dissolved oxygen): with a hand-held DO meter and adjust air flow to keep it up to 0.5 – 1 mg/L for equalization tank (TNK-301) and 2- 3 mg/L for aeration tank (TNK-501); check the DO readings on the touch screen.
    - DO Control System: check automatic ON/OFF of aeration tank air blowers at low and high settings of DO without the return of aerated water from the membrane tanks to aeration tank, and record blower ON/OFF duration.

Membrane Tanks (TNK-601/TKN-602):

- Enable membrane operation.
- Start the pumps (P-501/P-502) for aeration tank and fill the membrane tank (TNK-601) with potable water.
- Start the air blowers (B-601/B-602/B-603/B-604/B-605) for membrane tank (TNK-601) and blowers (B-606/B-607/B-608/B-609/B-610)for membrane tank (TNK-602) and check for an even distribution of air across the membrane filter area and air bubble uniformity above the membrane modules/cassettes.

© 2013 by **newterra**, ltd.
All rights reserved. No part of this document may be reproduced or transmitted in any form or by any means, electronic, mechanical, photocopying, recording, or otherwise, without prior written permission of **newterra** ltd.

newterra ltd.
1325 California Avenue, Brockville, ON K6V 5Y6
744 Gordon Baker Road, Toronto, ON M2H 3B4
(800) 420-4056 / www.newterra.com

- Check hydraulic flow pattern through the membranes and between membrane modules/ cassettes and tank wall.
- Make a clean copy of the **Clean Water Testing Sheet** presented in **Appendix K** of this O&M Manual.
- Start the permeate (vacuum) pumps P-701/P-702
- Record all checked parameters in the **Clean Water Testing Sheet:**
    - Record the vacuum (TMP) on gauges PI-701/PI-702 [for clean water could be 0.05 to 0.07 bar (20" to 29" WC)].
    - Record ambient temperature, and water temperature and DO with a hand-held DO meter.
    - Gradually increase the permeate flow while recording the vacuum (TMP) on the gauges up to the anticipated peak wastewater flow.
- Forward a complete **Clean Water Testing Sheet** to **newterra** for analysis.

© 2013 by **newterra**, ltd.
All rights reserved. No part of this document may be reproduced or transmitted in any form or by any means, electronic, mechanical, photocopying, recording, or otherwise, without prior written permission of **newterra** ltd.

5.0 OPERATION of newterra MicroClear™ MBR

Membrane Bioreactor (MBR) treatment technology is an effective combination of an activated sludge biological treatment process with MicroClear™ MBR membrane filtration technology. The MBR operates at MLSS (mixed liquor suspended solids) concentrations between 8,000 to 12,000 mg/L.

This section provides a brief description of the treatment process and how it is controlled. Most of the equipment in the **newterra** WWTP can be operated in either manual or automatic mode. The system is designed to always run in auto mode. The manual option is provided mainly for maintenance purposes. Equipment and instrumentation identification numbers are referenced from the **Process & Instrumentation Diagram** and **System Layout** presented in **Appendix A** of this O&M Manual.

Automatic Operation

The PLC-based control system is the default operation mode for the **newterra** MicroClear™ MBR. The system operates as a programmable computer that:

- Receives analog and digital input signals from the switches and transmitters being controlled;
- Processes this information using the structure and rules entered into the program;
- Generates outputs that control the equipment - turn equipment **OFF** or **ON**.

Under normal operation, all switches are set in the **AUTO** position on the **HMI**.

All alarms are visually indicated on a beacon stack on the roof of the exterior of the container:

- Green – System OK
- Green Flashing – System Auto Restart
- Red Solid – Warning Alarm
- Red Flashing – Critical Alarm
- No Light – Loss of Power

The MBR will always remain in auto run mode, unless the kill switch is pressed or power is down. The MBR will automatically restart after power failure given that the system was running when the power failed.



All high high level alarms (identified as LSHH on P&ID) indicate a critical situation for imminent tank overflow and could result in pump(s) shutting off to avoid overflow situations and requires immediate operator attention.

© 2013 by **newterra**, ltd.
All rights reserved. No part of this document may be reproduced or transmitted in any form or by any means, electronic, mechanical, photocopying, recording, or otherwise, without prior written permission of **newterra** ltd.

Manual Operation

The manual mode of operation is provided for maintenance purposes and for emergency operation of the plant in the unlikely event of a failure of the automatic control system (default operation mode). Operators **must be present when equipment is operated in the manual mode.**

A HAND-OFF-AUTO (H-O-A) switch is provided on the touch screen of the control panel. The HAND position on the switch allows the equipment to be operated in the manual mode.



For safety reasons, a motor in the HAND position will only run for two minutes before it will be automatically stopped.

5.1 Wastewater Treatment Process Description / Control Narrative

The **newterra** MBR WWTP comprises screen modules, equalization tank, aeration tank, membrane filtration module, UV system, permeate storage tank, and sludge dewatering module.

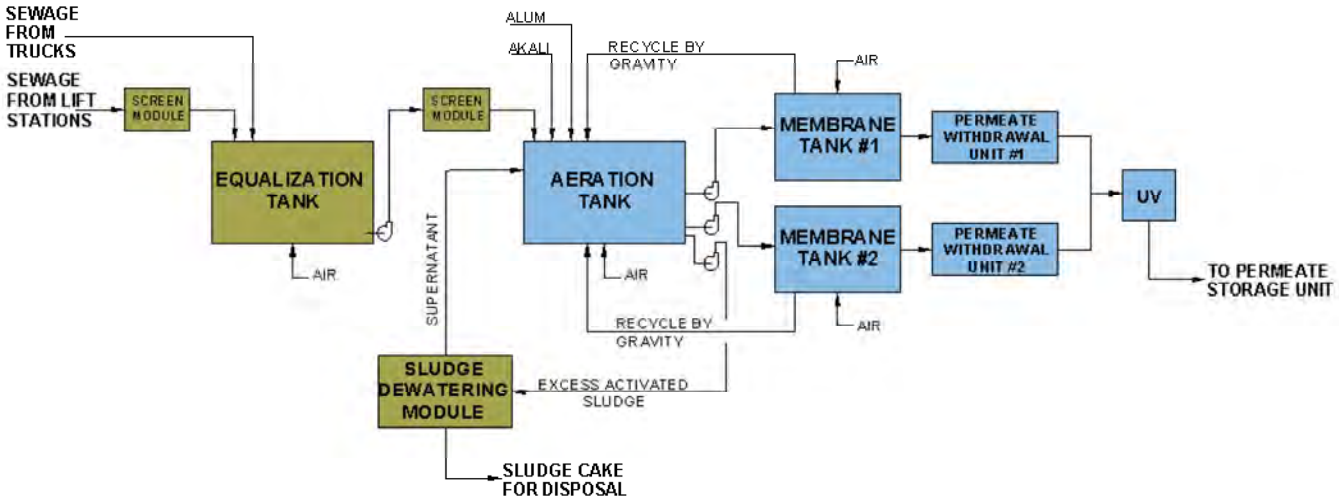

© 2013 by **newterra**, ltd.
All rights reserved. No part of this document may be reproduced or transmitted in any form or by any means, electronic, mechanical, photocopying, recording, or otherwise, without prior written permission of **newterra** ltd.

5.1.1 Buildings/ Utilities

The newterra MBR WWTP is housed inside six (6) enclosures (buildings):

- Screen building (BLD-7903) with two (2) rooms: Room #1 (Electrical Classification – Class 1, Div 2 area), and Room #2 (GP area)
- Equalization tank building (BLD-7901)
- Aeration building (BLD-7902), GP area
- Membrane Filtration building (BLD-7900), GP area
- Effluent building (BLD-7905), GP area
- Sludge building (BLD-7904) with two (2) rooms: Room #1 (Electrical Classification – Class 1 Div 2 area), and Office Room #2 (GP area)

The main control panel is located in the Screen building (BLD-7903), Room #2 (GP area)

5.1.1.1 Wastewater Treatment Plant Power Supply



Please refer to the as-built Electrical Block Diagram presented in Appendix A of this manual.

A power monitor has been installed in the main power distribution panel to ensure proper power and phase rotation is delivered to the system. The main power distribution panel is located in the Screen BLD-7903, Room #2 (GP area).

E-STOP

There are several emergency stop buttons wired to a common system kill circuit (KILL-7901) in the plant:

- Kill Switch Emergency Stop **MCP-01** (ESD-8201) located in the control room of the BLD-7903, Room #2, (GP area)
- Emergency Stop **MCP-02** (ESD-8202) located in BLD-7900
- Emergency Stop **MCP-03** (ESD-8203) located in BLD-7905
- Emergency Stop **MCP-04** (ESD-8204) located in BLD-7904, Room #2 (GP area)
- Emergency Stop Screen (ESD-7931) located in BLD 7903, Room #1 1 (Class 1 Div 2 area)
- Emergency Stop Membrane Filtration (ESD-7911) located in BLD-7900

The following emergency stop switches are used for local shut off:

- Emergency Stop Effluent (ESD-7905) located in BLD-7905
- Emergency Stop Sludge (ESD-7941) located in BLD-7904

© 2013 by **newterra**, ltd.
All rights reserved. No part of this document may be reproduced or transmitted in any form or by any means, electronic, mechanical, photocopying, recording, or otherwise, without prior written permission of **newterra** ltd.

newterra ltd.
1325 California Avenue, Brockville, ON K6V 5Y6
200 555 11th Ave SW, Calgary, AB, T2R 1P6
(800) 420-4056 / www.newterra.com

5.1.1.2 SCREEN BLD-7903

Ventilation

Two (2) exhaust blowers (B-7931 & B-7932) provide constant ventilation for the Screen Modules and Building BLD-7903 Room #1 (Electrical Classification – Class 1 Div 2 area). The air from the blowers is passed through a heat recovery system prior to discharging outside. The blowers run at all times at a rate of ~12 air changes per hour to ensure the requirements of the electrically classified location are met.

Alarms

If the blowers' motors stop running an alarm signal will be sent to the PLC from current switches (YI-7931/ YI-7932).

A single exhaust fan (F-7911) is locate in the Room #2 (GP) of the BLD-7903 where the main control panel is located. The purpose of the fan is to prevent the building temperature from climbing higher than desired room set point temperature. The desired room temperature must be set by the operator with the building high temperature switch TSH-7911. If this switch is tripped the exhaust fan will run until the temperature drops below the set point.

Note: The fan (F-7911) is to be used primarily during the summer months - freezing cold air in to the building can lead to condensation/potential freezing risks for critical pieces of equipment.

Hydrogen Sulphide Detection

A Hydrogen Sulphide (H_2S) Detector (AIT-7931) is installed in the screen building (BLD-7903) Room #1 (Electrical Classification – Class 1 Div 2 area). This sensor allows continuous monitoring for H_2S gas. In the event the H_2S alarm level set point is exceeded an alarm will be triggered and indicated on the HMI, an internal and external audible buzzer will sound, the alarm beacon light will illuminate. The water treatment process will continue to run.

Temperature control

For building (BLD-7903), temperature is controlled manually at the local thermostats of the heaters: H-7931/H-7932 for the Room #1 (Electrical Classification - Class 1 Div 2) and H-7933 for the Room #2 (GP area). They are not linked to the PLC.

The operator is required to set the desired building temperature set point in ^{o}F at the temperature switches (TSL-7931 and TSL-7932) located in the general purpose room of this building. If the building temperature falls below the temperature switch setting the electric heaters (H-7931/H-7932) will turn on. H-7933 is locally controlled only.

CAUTION: The temperature switch units are in ^{o}F.

© 2013 by **newterra**, ltd.
All rights reserved. No part of this document may be reproduced or transmitted in any form or by any means, electronic, mechanical, photocopying, recording, or otherwise, without prior written permission of **newterra** ltd.

newterra ltd.
1325 California Avenue, Brockville, ON K6V 5Y6
200 555 11th Ave SW, Calgary, AB, T2R 1P6
(800) 420-4056 / www.newterra.com

Alarms

If the temperature of the room #1 and room #2 in the BLD-7903 drops below the low low temperature set point, the alarm switches (TSLL-7931 & TSLL-7932) will trip and after 300 sec a low temperature alarm will register on the HMI and the red beacon light will illuminate. This may indicate that heaters (H-7931/H-7932) are faulty.

5.1.1.3 EQUALIZATION TANK BLD-7901

Ventilation

The Equalization Tank (TNK-301) is equipped with a ventilation exhaust blower (B-307) located in classified area of BLD-7903. The blower runs at all times providing constant ventilation of the equalization tank. The blower vents air at a rate of 12 air changes per hour and exhausts to the exterior of the building.

If the blower's motor stops running an alarm signal will be sent to the PLC from current indicator switch (YI-307).

5.1.1.4 AERATION TANK BLD-7902

Ventilation

The aeration tank head space is vented by a blower (B-503) to the aeration foam tank (see details in subsection 5.2.3).

5.1.1.5 MEMBRANE FILTRATION BLD-7900

Hydrogen Sulphide Detection

A Hydrogen Sulphide (H_2S) Detector (AIT-7911) is installed below the control panel in the permeate extraction system room of building 7900. This sensor allows continuous monitoring for H_2S gas. In the event the H_2S alarm level set point is exceeded an alarm will be triggered and indicated on the HMI, an internal and external audible buzzer will sound, the alarm beacon light will illuminate. The water treatment process will continue to run.

Temperature control

For building (BLD-7900), temperature is controlled manually at the local thermostats for the wall mounted heaters: H-7911/H-7912. They are not linked to the PLC.

The operator is required to set the desired building temperature set point in ^{o}F at the temperature switch (TSL-7912). If the building temperature falls below the temperature switch setting the wall mounted electric heaters (H-7911/H-7912) will turn on.

CAUTION: The temperature switch units are in ^{o}F.

© 2013 by **newterra**, ltd.
All rights reserved. No part of this document may be reproduced or transmitted in any form or by any means, electronic, mechanical, photocopying, recording, or otherwise, without prior written permission of **newterra** ltd.

Alarms

If the temperature in the BLD-7900 drops below the low low temperature set point, the alarm switch (TSLL-7901/TSLL-7905) will trip and after 60 sec the room's temperature alarm will register on the HMI and the red beacon light will illuminate. This may indicate that heaters (H-7911/H-7912) are faulty.

5.1.1.6 EFFLUENT STORAGE BLD-7905

Temperature control

For BLD-7905, temperature is controlled manually at the local thermostat for the wall mounted heaters (H-7951/H-7952). They are not linked to the PLC.

The operator is required to set the desired building temperature set point in ^{o}F at the temperature switch (TSL-7952). If the building temperature falls below the temperature switch setting the wall mounted electric heaters (H-7951/H-7952) will turn on.

CAUTION: The temperature switch units are in ^{o}F.

Alarms

If the temperature in the BLD-7905 drops below the low low temperature set point, the alarm switch (TSLL-7951) will trip and after 60 sec a building temperature alarm will register on the HMI and the red beacon light will illuminate. This may indicate that heaters (H-7951/H-7952) are faulty.

5.1.1.6 SLUDGE BLD-7904

Ventilation

Building (BLD-7904), Room #1, Class 1 Div 2 is equipped with an exhaust blower (B-7941). The blower runs at all times providing constant ventilation of the room. The blower vents air at a rate of 12 air changes per hour. The air from the blower (B-7941) is passed through a heat recovery system prior to discharging outside the BLD-7904.

If the blower's motor stops running an alarm signal will be sent to the PLC from current (YI-7941).

Temperature control

For BLD-7904, temperature is controlled manually at the local thermostats for the wall mounted heaters: H-7941/H-7942 for the Room #1, Class 1 Div 2 and H-7943 for the Room #2 General Purpose. They are not linked to the PLC. There are temperature switches in the BLD-7904: TSL-7941/TSL-7942 for the Room #1 (Class 1 Div 2).

© 2013 by **newterra**, ltd.
All rights reserved. No part of this document may be reproduced or transmitted in any form or by any means, electronic, mechanical, photocopying, recording, or otherwise, without prior written permission of **newterra** ltd.

Alarm

Alarm switch (TSLL-7941) is activated when the temperature falls below set point. This may indicate that heaters (H-7941/H-7942) are faulty.

Compressed air

Air compressor (C-901) supplies air to operate the filter press (FP-901). The air compressor has level switches:

- an oil level switch alarm (LSLL-901) is activated when the oil level is low
- if pressure switch (PSL-901) is activated an alarm will register on the HMI indicating the air compressor has malfunctioned.

5.1.1.7 FIRE AND EXPLOSION PROTECTION

There are some areas in the plant defined as Class 1 Div 2 according to the National Electrical Code Classification (NFPA 70). These areas are:

- Screen building (BLD-7903), Room #1
- Equalization tank zone, (BLD-7901)
- Sludge building (BLD-7904), Room #1

This classification refers to the areas with potential hazards as flammable gas which is not present under normal conditions.

Fire alarm system is implemented across the plant. The fire protection measures include fire alarm system (FAS), fire detection system (FDS), and portable fire extinguishers. Please refer to the Fire Alarm Layout Drawing presented in Appendix A of this manual.

5.1.2 Process Description

5.1.2.1 Screen Modules Building (SCREEN BLD-7903)

Function: a screening process is provided to remove hair, and fibrous materials from wastewater supplied from the lift stations and delivered by sewage trucks.

There are two (2) screen systems in the plant:

- screen module (SCR-201) for screening incoming raw sewage pumped from lift stations
- screen module (SCR-401) for screening effluent from equalization tank (TNK-301) taking into account addition of raw sewage delivered by sewage trucks and added into the equalization tank (TNK-301)

Both screen modules are located in the building (BLD-7903), Room #1 (Class 1 Div 2 area).

© 2013 by **newterra**, ltd.
All rights reserved. No part of this document may be reproduced or transmitted in any form or by any means, electronic, mechanical, photocopying, recording, or otherwise, without prior written permission of **newterra** ltd.

Screw Screen Compactor (SCR-201)/Screen Tank

The screw screen compactor module consists of:

- screw screen compactor with 2-mm opening, equipped with solids bagging
- discharge tank (TNK-202) for collection of the screened wastewater
- external discharge pumps (P-201/P-202) to transfer screened wastewater to the equalization tank (TNK-301)
- self cleaning spray nozzles set on a timer through the HMI

Screw Screen Basin Level Control

The screw screen (SCR-201) will run when the permissive signal (YC-101) to receive from the lift station is ON, and the high level in the screen tank has been reached. If the high level in the screw screen basin has been reached this indicates the screen is clogged. The screw will continue to turn for 2 minutes after the high level condition has cleared.

Screened wastewater flows by gravity from screw screen basin to the screen discharge tank (TNK-202) through 6" discharge pipe.

Alarms

If the clogged screen cannot be cleared and the high high level in the screw screen basin is reached the LSHH-201 will trip. If the LSHH-201 level switch is tripped, an alarm will be generated and will remain visible on the HMI until the alarm condition has cleared. The permissive to receive wastewater from the lift station will be lost. **Operator intervention is required in the event of this alarm!**

In the event the SCR-201 motor trips off on overload an alarm will register on the HMI and the red beacon light will flash.

Screen Tank Level Control:

The screen discharge tank (TNK-202) is equipped with:

- (2) external discharge pumps (P-201 Duty and P-202 Standby)
- discharge pressure indicator (PI-201/ PI-202) to measure the discharge pressure
- motor current switch (YA-201 /YA-202)
- variable frequency drive (VFD-201/VFD-202)
- discharge tank (TNK-202) is equipped with level transmitter (LT-202) and high high level switch (LSHH-202)

After completion of 4 cycles the standby pump will run for 1 cycle. Each time a pump starts the cycle count goes up. As long as the wastewater level in TNK-202 is between the high and low set point, the PLC will allow the operation of the pumps (P-201/P-202) to transfer wastewater to the equalization tank (TNK-301).The VFD's regulate the flow of the pumps to keep the discharge flow rate at the desired set point flow.

© 2013 by **newterra**, ltd.
All rights reserved. No part of this document may be reproduced or transmitted in any form or by any means, electronic, mechanical, photocopying, recording, or otherwise, without prior written permission of **newterra** ltd.

If current switches (YA-201/YA-202) are ON and level transmitter (LT-202) indicates the high set point, then the pumps turn on until the level transmitter (LT-202) gets to its low set point.

If the high level set point is on for more than 5 seconds, pumps (P-201/P-202) will increase speed to clear the high level condition.

Alarms

In the event the screen tank discharge pumps motor current switches (YA-201/YA-202) trip, an alarm will register on the HMI and the red beacon light will flash.

Screen Cleaning:

A potable water connection to the screw screen compactor unit (SCR-201) is used to clean the screw screen. A solenoid valve (SV-201) is controlled on a timer to open the solenoid valve for 2 seconds every 60 minutes, with the goal of removing solid build up on the screw screen. Frequency of cycle can be changed through the HMI.

5.1.2.2 Equalization Tank (TNK-301)

Function: Buffers influent variable flow to prevent concentration fluctuations in (i.e. BOD, TSS etc.) through the MBR treatment system.

The equalization tank (TNK-301) receives screened wastewater from the screen tank (TNK-202). The equalization tank (TNK-301) can also receive raw wastewater from the sewage trucks. There are two truck hook-ups from the screen building (BLD-7903) side equipped with 3" female camlocks, valves and 3" PVC pipes.

WARNING: NO CONTROLS ARE IN PLACE TO SHUT OFF TRUCK INFLUENT TO THE EQUALIZATION TANK IN THE EVENT OF A HIGH OR HIGH HIGH LEVEL CONDITION IN THE EQUALIZATION TANK. THE LEVEL OF THE EQ TANK MUST BE MANUALLY MONITORED AT ALL TIMES DURING THE OFFLOADING OF TRUCKS.

The effective volume of the EQ tank is 43.5 m^3, providing a hydraulic retention time of 14.5 hours. The equalization tank is equipped with:

- level monitoring/control equipment
- 2 electric immersion heaters with local temperature control
- blowers (B-301to B-306) supply air to the air diffusers
- 10 EDI fine-bubble air diffusers for mixing and assisting the elimination of potential odour
- 12 magnesium anodes which act as the tank ground and will be sacrificially eroded as a means of prolonging the tank life
- discharge pumps (P-301/ P-302) for transferring wastewater to the SCR-401

© 2013 by **newterra**, ltd.
All rights reserved. No part of this document may be reproduced or transmitted in any form or by any means, electronic, mechanical, photocopying, recording, or otherwise, without prior written permission of **newterra** ltd.

Air Diffusers Control

Blowers (B-301- B-306) supply air to the air diffusers installed in the bottom of the equalization tank. A pressure indicator (PI-301) and switch (PLS-301) is installed on the discharge side of the blowers.

Alarms

If the blower air pressure drops below set point, the low pressure switch (PLS-301) will trip and a low pressure alarm will be activated through the PLC. The flashing red beacon light will illuminate.

Temperature Control

The equalization tank (TNK-301) is heated via 2 electric immersion heaters (H-301/H-302).Temperature in the tank is controlled via a local thermostat. Recommended temperature setting for TSL-301/TSL-302 is 10°C to 15°C.

Alarms

If the Temperature Switch Low Low (TSLL-301) is tripped an alarm signal will register on the HMI and the flashing red beacon light will illuminate.

Note: As a low water level in the tank can cause damage to the heaters, the Level Switch Low Low (LSLL-301) is installed in the equalization tank to protect the immersion heaters and if tripped will shut the tank heaters off and initiate an alarm signal from the PLC.

Transfer Pumps/Level Control

The equalization tank (TNK-301) has two (2) external pumps (P-301, P-302) with one of the pumps acting as a standby. Pump (P-301) operates for 4 cycles, pump (P-302) for 1. This pump transfers the wastewater from the equalization tank (TNK-301) to SCR-401 screw screen basin tank.

The equalization tank discharge pumps (P-301/P-302) have local pressure indicators (PI-302/PI-303) to measure discharge pressure and motor current switches (YI-301/YI-302). The discharge pressure can be used to determine an estimation of the flow rate based on the pump curve.

A level transmitter (LT-301) is used to indicate the liquor level in the equalization tank (TNK-301). As long as the level in the tank is above set point, the PLC will allow the operation of either EQ tank discharge pump (P-301 or P-302). If the high level in the EQ tank is met the screen tank supply pumps will be turned off.

Alarms

In the event the equalization tank discharge pumps motor current switches (YI-401/YI-402) trip, an alarm will register on the HMI and the red beacon light will flash.

© 2013 by **newterra**, ltd.
All rights reserved. No part of this document may be reproduced or transmitted in any form or by any means, electronic, mechanical, photocopying, recording, or otherwise, without prior written permission of **newterra** ltd.

The Level Switch High High (LSHH-301) if tripped will send a signal to the PLC to warn of imminent overflow in the equalization tank (TNK-301).

Post EQ Screw Screen Compactor (SCR-401)

The screw screen compactor module consists of:

- screw screen compactor with 2-mm opening, equipped with solids bagging
- discharge tank (TNK-401) for collection of the screened wastewater
- external discharge pumps (P-401/P-402) to transfer screened wastewater to the aeration tank (TNK-501)
- self cleaning spray nozzles set on a timer through the HMI

Screw Screen Basin Level Control

The screw screen (SCR-401) will run when the high level in the screen tank has been reached. If the high level in the screw screen basin has been reached this indicates the screen is clogged. The screw will continue to turn for 2 minutes after the high level condition has cleared.

Screened wastewater flows by gravity from screw screen basin to the screen discharge tank (TNK-401) through 6" discharge pipe.

Alarms

If the clogged screen cannot be cleared after 5 minutes a high high level alarm (LSHH-402) will be triggered and will remain visible on the HMI until the alarm condition has cleared. The permissive to receive wastewater from the equalization tank (TNK-301) will be lost. **Operator intervention is required in the event of this alarm!**

In the event the SCR-401 motor trips off on overload an alarm will register on the HMI and the red beacon light will flash.

Screen Tank Level Control:

The screen discharge tank (TNK-401) is equipped with:

- (2) external discharge pumps (P-401 Duty and P-402 Standby)
- discharge pressure indicator (PI-401/ PI-402) to measure the discharge pressure
- motor current switch (YA-401 /YA-402)
- discharge tank (TNK-401) is equipped with a low level switch(LSL-402), high level switch (LSH-402) and a high high level switch (LSHH-202)

After completion of 4 cycles the standby pump will run for 1 cycle. Each time a pump starts the cycle count goes up. As long as the wastewater level in TNK-401 is above the low level switch level, the PLC will allow the operation of the discharge pumps (P-401/P-402) to transfer wastewater to the equalization tank (TNK-301).

Alarms

In the event the screen tank discharge pumps motor current switches (YA-201/YA-202) trip, an alarm will register on the HMI and the red beacon light will flash.

© 2013 by **newterra**, ltd.
All rights reserved. No part of this document may be reproduced or transmitted in any form or by any means, electronic, mechanical, photocopying, recording, or otherwise, without prior written permission of **newterra** ltd.

Screen Cleaning:

A potable water connection to the screw screen compactor unit (SCR-401) is used to clean the screw screen. A solenoid valve (SV-401) is controlled on a timer to open the solenoid valve for 2 seconds every 60 minutes, with the goal of removing solid build up on the screw screen. Frequency of cycle can be changed through the HMI.

5.1.2.3 Aeration Tank (AERATION BLD-7902)

Function: Oxygen is added to the wastewater to ensure microorganism concentration is at optimum levels to metabolize contaminants. (i.e. oxidation of carbonaceous BOD; nitrification (conversion of TKN to NO_3-N).

One (1) aeration tank (TNK-501) located in BLD-7902 has an overall effective volume of 48 m^3, providing a hydraulic retention time of 16 hours. TNK-501 receives screened wastewater from the screen tank (TNK-401) of the post EQ screen module (SCR-401), return flow from the membrane tanks (TNK-601/ TNK-602), and supernatant from (TNK-901) of sludge dewatering module.

Blowers supply air to the submerged fine-bubble diffusers to ensure biological oxidation (aeration) and to keep solids in the water suspended. Mixed liquor is constantly re-circulated from the bottom of the tanks to the top through spray nozzles. This recirculation process is in place for foam suppression. Alum and soda ash chemical metering systems are in place to ensure regulation of aeration tank water pH and phosphorus levels.

The aeration tank (TNK-501) is equipped with:

- level, temperature, pH, and dissolved oxygen (DO) monitoring and control equipment.
- 2 electric immersion heaters (H-501/H-502) to keep the temperature of the biological process above 15-20° C.
- Blowers (B-501, B-502) equipped with VFD's to supply air to the fine-bubble air diffusers in (TNK-501)
- 30 EDI fine-bubble air diffusers
- Tank recirculation/sludge removal pump (P-503)
- Tank discharge pumps (P-501/P-502) transfer wastewater to the membrane tanks (TNK-601/TNK-602)
- Chemical Metering Systems – soda ash tank (TNK-6101) with dosing pump (P-6101) and alum tank (TNK-6102) with dosing pump (P-6102)

<u>Temperature Control</u>

The aeration tank (TNK-501) is heated via electric immersion heaters (H-501/H-502). Temperature in the tank is controlled via a local thermostat. Recommended temperature setting for TSL-301/TSL-302 is 15°C to 20°C.

© 2013 by **newterra**, ltd.
All rights reserved. No part of this document may be reproduced or transmitted in any form or by any means, electronic, mechanical, photocopying, recording, or otherwise, without prior written permission of **newterra** ltd.

Alarms

If the Temperature Switch Low Low (TSLL-501) is tripped an alarm signal will register on the HMI and the flashing red beacon light will illuminate.

Note: As a low water level in the tank can cause damage to the heaters, the Level Switch Low Low (LSLL-501) is installed in the equalization tank to protect the immersion heaters and if tripped will shut the tank heaters off and initiate an alarm signal from the PLC.

Discharge Pump/Level Control

The aeration tank (TNK-501) has two (2) external transfer pumps (P-501, P-502). Pump (P-501) transfers wastewater to membrane tank (TNK-601) and pump (P-502) transfers wastewater to membrane tank (TNK-602).

Level transmitter (LT-501) indicates the liquor level in the aeration tank (TNK-501). As long as the level in the tank is above set point the PLC will allow the operation of both discharge pumps (P-501 or P-502).

Alarms

If the Level Switch High High (LSHH-501) is tripped an alarm will register on the HMI, the flashing red beacon light will illuminate and the equalization discharge pumps will be shut down or disabled from running for the duration of the high high level condition.

The aeration tank discharge pumps (P-501/P-502) have pressure indicators (PI-501/PI-502) to measure discharge pressure and motor current switches (YA-P501/YA-P502). The discharge pressure can be used to determine an estimation of the flow rate based on the pump curve.

Alarms

In the event the aeration tank discharge pumps motor current switches (YA-P501/YA-P502) trip, an alarm will register on the HMI and the red beacon light will flash.

Dissolved Oxygen Control

The aeration tank (TNK-501) is equipped with a dissolved oxygen (DO-501) sensor. The PLC is programmed to ensure the level of DO remains above 2 mg/L. If the level of DO falls below the set point value a 4-20 mA signal is sent to the VFD (VFD-501) that controls the speed of the blowers (B-501, B-502).The speed of the blowers is regulated to maintain the DO at set point level.

Alarms

In the event the Dissolved Oxygen level set point cannot be achieved within 15 minutes of the detection of the level being outside of the set point range a low DO alarm will register on the HMI and the red beacon warning light will illuminate. The duty blower will run at full speed for

© 2013 by **newterra**, ltd.
All rights reserved. No part of this document may be reproduced or transmitted in any form or by any means, electronic, mechanical, photocopying, recording, or otherwise, without prior written permission of **newterra** ltd.

15 minutes to attempt to regain the oxygen level. If after 15 minutes the oxygen level has not returned to below set point the duty blower defaults to a manual speed setting until operator intervention is possible.

pH Control

A chemical dosing pump (P-6101) is provided to inject soda ash (Na_2CO_3) into the aeration tank (TNK-501) to maintain the pH at desired pH set point. If the pH measured by pH probe (PH-501) falls below set point, the PLC will turn the pump on for 30 seconds, turn the pump off for 30 seconds and repeat this cycle until tank pH has regained desired set point. The pump stroke must be set by the MBR system operator.

Alarms

In the event the pH level set point cannot be achieved a low or high pH alarm will register on the HMI and the red beacon warning light will illuminate. The system will continue to adjust to achieve set point pH throughout the duration of the alarm.

Phosphorus Concentration Control

A chemical dosing pump (P-6102) is provided to inject alum [$Al_2(SO_4)_3$]. The dosing pump will be stroked based on an influent volume set point entered on the HMI by the system user. Alum is used to remove phosphorus from the influent. The alum dosage volume is manually set locally at the metering pump by adjusting the pump stroke.

Foam Suppression

The aeration tank (TNK-501) is equipped with an external pump (P-503) and a spray nozzle system for foam suppression. The pump (P-503) has a pressure indicator (PI-503) measuring its discharge pressure. The flow is controlled by opening a manual gate valve installed in the foam suppression line. The foam suppression line is equipped with a de-ragger unit to prevent spray nozzles from plugging.

Sludge Dewatering Unit Supernatant Return

Supernatant can be returned to the aeration tank (TNK-501) if the MBR system is operating in conjunction with a sludge dewatering system. Supernatant will be returned as long as the aeration tank level is below the High Level set point. The PLC will shut down pump (P-503) for the duration of the return cycle.

Sludge Removal

A sludge removal pipeline is provided at a tee off of the aeration tank recirculation line, isolated by a manual ball valve. The manual isolation valve must remain closed at all times. To remove sludge the manual isolation valve is opened along with the manual isolation valve at the entrance of TNK-901, while P-503 is running.

© 2013 by **newterra**, ltd.
All rights reserved. No part of this document may be reproduced or transmitted in any form or by any means, electronic, mechanical, photocopying, recording, or otherwise, without prior written permission of **newterra** ltd.

5.1.2.3 Membrane Filtration (TNK-601/602)

Function: Mixed liquor filtration and supplemental biological oxidation.

Membrane filtration is comprised of a membrane tank and permeate extraction unit

Membrane unit includes:

- Two (2) membrane tanks, each tank is equipped with submersible membrane filtration module, level controls, gravity recycling line, drain, access hatch, viewing window, and sample port
- Blower unit for membrane tanks; each unit contains five (5) blowers and it is equipped with pressure indicator, pressure switch low alarm, and motorized three-way valve
- Recirculation pumps transferring mixed-liquor from the membrane tanks (TNK-601/TNK-602) to the aeration tank (TNK-501)

Permeate extraction unit includes:

- Permeate pumps (P-701/P-702) with VFD, current switches, pressure and flow rate control equipment, solenoid valves, and motorized valves
- Backwash tank (T-801) equipped with level control switches, submersible pump (P-801), and solenoid valve
- UV disinfection unit with two (2) UV lights (UV-751/UV-752)

Membrane Unit Operation

External pumps (P-501/P-502) housed in (BLD-7900) transfer mixed liquor from the aeration tank (TNK-501) to the membrane tanks (TNK-601/TNK-602). Each membrane tank contains One (1) MicroClear™ MB3-1 submerged membrane module (membrane cassettes are complete with stainless steel housing and permeate piping with header).

Each membrane tank is equipped with air diffusers for the purpose of scouring the membranes to assist in the prevention of membrane fouling.

Mixed liquor from the membrane tanks (TNK-601/TNK-602) is constantly recycled back to the aeration tank (TNK-501) by external pumps (P-601/ P-602) to maintain even biomass inventory within the aeration tank and membrane tanks.

Each of the respective pumps (P-601/P-602) are equipped with pressure indicators (PI-603/PI-604) to measure the discharge pressure of the pumps, and current switches (YA-601/YA-602). The membrane tanks are also equipped with gravity overflow lines that recycle mixed liquor back to the aeration tank (TNK-501).

Membrane Tanks Level Control

The membrane tanks (TNK-601/TNK-602) contain high level switches (LSH-601/LSH-602) which activate the permeate pumps (P-701/P-702) to start pulling permeate out of the membrane tanks (TNK-601/TNK-602).

© 2013 by **newterra**, ltd.
All rights reserved. No part of this document may be reproduced or transmitted in any form or by any means, electronic, mechanical, photocopying, recording, or otherwise, without prior written permission of **newterra** ltd.

Alarms

The level switches high high alarm (LSHH-601/LSHH-602) inform the operator of an imminent overflow. It also shuts off the aeration tank discharge pumps (P-501/P-502) to prevent more mixed liquor from entering the membrane tank (TNK-601/TNK-602).

Recycle Pump Control

Recycle (RAS) pumps (P-601/P-602) recycle mixed liquor from membrane tanks (TNK-601/TNK-602) back to the aeration tank (TNK-501) as long as the discharge pumps (P-501/P-502) are on, water level switches in the membrane tanks (LSH-601/LSH-602) are ON, and there is no High High Level in aeration tank.

Alarms

In the event the RAS pumps motor current switches (YA-601/YA-602) trip, an alarm will register on the HMI and the red beacon light will flash.

Blower Units Control

The membrane air scouring blowers (B-601 to B-605 for TNK-601 and B-606 to B-610 for TNK-602) are connected to the air diffusers in the membrane tanks (TNK-601/TNK-602) respectively. The common airlines to the membrane tanks are equipped with a discharge pressure indicators (PI-601/PI-602) and a pressure switches (PSL-601/ PSL-602).

Each blower unit is also equipped with an electrically actuated three-way valve (MV-601/ MV-602) to direct the flow of air through medium air diffusers or coarse air diffuser. The valves (MV-601/MV-602) are installed with closed position switches (ZSC-601/ZSC-602) that is monitored by the PLC.



The blowers scouring the membranes:

- Operates continuously **(24/7)**
- Turned off for one minute every hour to relax the membranes

Coarse Air Diffuser Cycle

Under normal operation, air is directed through the medium air diffusers at the base of the membrane housing. If the level switch high (LSH-601) has not been reached in 30 minutes, the air is diverted to the coarse air diffusers in the membrane tank. Changing where air enters into the membrane tank (TNK-601) changes the direction of scouring, helping remove debris on the membrane modules/cassettes.

The air will be directed to the coarse air diffusers for the time interval set point entered through the HMI. The duration of the coarse air diffuser cycle time is adjustable up to 15 minutes, by changing the set point on the HMI screen to meet the particular plant operating conditions.

© 2013 by **newterra**, ltd.
All rights reserved. No part of this document may be reproduced or transmitted in any form or by any means, electronic, mechanical, photocopying, recording, or otherwise, without prior written permission of **newterra** ltd.



Blower for scouring air must be on 24/7, as failure of air supply can lead to clogging of the air diffusers and membranes.

Alarms

If the pressure switches low alarm (PSL-601/PSL-602) are tripped, a signal will be sent to the PLC which will generate an alarm indicating a potential blowers (B-601 to B-610) malfunction which will cause the corresponding membrane permeate tank discharge pumps (P-701/P-702) to stop. This interlock is in place to prevent damaging the membranes.

Please note: At no time shall the vacuum pumps P-701/P-702 operate when the pressure switches (PSL-601/PSL-602) are active; this is to ensure that air for membrane scouring is available at all times, and to protect the membranes from fouling.

Permeate Extraction Unit Operation

Vacuum pumps (P-701/ P-702) draw the water through the membranes under a preset flow rate of 31.5 Lpm (at a design flux of 18 LMH). Permeate is run through UV system for final disinfection before entering permeate storage tank (TNK-811).

Permeate Flow Control

There are two (2) operational modes for permeate flow control, flow mode (constant flux mode) or vacuum mode (constant TMP mode).The operator has the option of selecting the permeate flow control mode on the screen. Flow transmitters (FT-701/FT-702) are installed on the permeate discharge line to measure the effluent flow from each membrane tank.

Flow Mode (default for newterra MBR)

- Normal permeate flow rate is 31.5 Lpm (corresponds to a design flux rate of 18 LMH)
- This setpoint is used for vacuum pumps (P-701/P-702) VFDs control
- The maximum permeate flow setpoint is 52.5 Lpm (corresponds to a maximum flux rate of 30 LMH)
- The operator has the option of changing the permeate flow rate on the screen, but the set point should not be greater than 31.5 Lpm under normal operating condition and cannot exceed 52.5 Lpm, at any given time

Note: If the vacuum reaches -0.250 bar the system automatically switches to Vacuum Mode.

© 2013 by **newterra**, ltd.
All rights reserved. No part of this document may be reproduced or transmitted in any form or by any means, electronic, mechanical, photocopying, recording, or otherwise, without prior written permission of **newterra** ltd.

Vacuum Mode

There are two vacuum set points for the permeate withdrawal system:

- Normal vacuum rate to pull the permeate out at a pre-set vacuum setpoint of -0.100 bar
- Higher vacuum rate (-0.120 bar) is used when the EQ tank's high level (LSH-301) is on, signalling the MBR to run at a higher vacuum to keep up with the incoming water
- The highest vacuum of the permeate extraction system is -0.300 bar

Permeate Discharge Pump Control

The permeate discharge pumps (P-701/P-702) will run continuously as long as the high level switches (LSH-601/P-602) in the membrane tanks (TNK-601/TNK-602) are activated. Permeate withdrawal is done based on the preset permeate normal flow rate or vacuum rate.

If the level switch (LSH-301) in the equalization tank (TNK-301) is active for more than 5 seconds, permeate pumps (P-701/P-702) start increasing the permeate flow rate using the variable frequency drives (VFD-701/VFD-702). The trans-membrane pressure (TMP) indicated by vacuum transmitters (VT-701/VT-702) and the calculated permeability are displayed on the touch screen. The permeability is a key indicator of membrane fouling state.

Membrane Relax Cycle

- After every 9 minutes of permeate flow the permeate discharge vacuum pumps (P-701, P-702) will stop and the electrically actuated valves SV-701/SV-702 will open to release vacuum through the membranes.

- The resulting removal of vacuum in the system allows the membranes to relax for 1 minute.

Membrane Backwash Cycle

- When necessary conditions have been met the backwash tank sump pump (P-801) will be activated, permeate pumps (P-701/P-702) shut off and the backwash supply valves (MV-701/MV-702) open, to allow the reversal of flow over the membrane surface.

- The duration of the relax and backwash time is adjustable by changing the set point on the **HMI** screen to meet the particular plant operating conditions. A combination of backwash and relaxation (no permeation) is carried out for the best performance of the membranes.



- Maximum head required for backwash is **one meter**.
- During the entire backwash cycle, the scouring of the membranes is continuous.

.

© 2013 by **newterra**, ltd.
All rights reserved. No part of this document may be reproduced or transmitted in any form or by any means, electronic, mechanical, photocopying, recording, or otherwise, without prior written permission of **newterra** ltd.

At design flow when the membrane discharge vacuum exceeds 0.2 bar/80" WC (transmitted by VT-701, and indicated locally at PI-701), or permeability drops rapidly to 50 LMH/bar, it is necessary to take the membrane tanks (TNK-601/TNK-602) offline for chemically enhanced backwash **(CEB)** cleaning (please refer to Section 7 of this O&M manual)..



The permeability is a key indicator of membrane fouling state. A permeability of less than 50 LMH/bar (or transmembrane pressure exceeding 0.2 bar) indicates a membrane chemical clean is required.

A chemical addition unit is provided in the building (BLD-7900) for membrane in-situ chemically enhanced backwash (CEB) and recovery cleaning. The unit includes:

- Citric acid tank (TNK-802) with chemical dosing pump (P-802)
- Sodium hypochlorite tank (TNK-803) with chemical dosing pump (P-803)

Backwash Tank

The backwash tank (TNK-801) has 3 level switches (LSL-801, LSH-801, LSHH-801). When the low level switch LSL-801 is tripped this indicates a low water level in the backwash tank. Solenoid valve (SV-801) will open to fill the tank to the high level switch (LSH-801).

Alarms

LSHH-801 indicates imminent overflow. An alarm signal will register on the HMI and the flashing red beacon light will illuminate. **Operator intervention is required**.

Disinfection System

The MBR permeate is run through UV system for final effluent disinfection. The disinfection system consists of two high intensity UVmax Lights (UV751/ UV752) installed in series. The UVmax lights provide disinfection with a UV dosage of 40 mJ/cm^2 and a flow rate of 303 L/min. This system is installed for protection in the event of a membrane breakthrough. The UV-Lights are connected to a solenoid safety (UVL-751, UVL-752) to restrict the flow in case the UV-Light system have been compromised.

Turbidity Meter

Turbidity transmitter (AIT-801) connected after the UV systems indicates the turbidity (solids content) in the treated effluent. High turbidity will activate an alarm as this can indicate possible breakthrough of the membranes.

© 2013 by **newterra**, ltd.
All rights reserved. No part of this document may be reproduced or transmitted in any form or by any means, electronic, mechanical, photocopying, recording, or otherwise, without prior written permission of **newterra** ltd.

5.1.2.4 Permeate /Treated Effluent Building (EFFLUENT BLD-7905)

Function: Treated effluent storage**,** ammonia oxidation with calcium hypochlorite followed by dechlorination.

Prior to final discharge to the receiving water body the treated effluent will be tested. In the event the biological process upset occurs, due to a toxic shock load or cold weather, it may result in a discharge of ammonia or total nitrogen into the receiving water body. Therefore, calcium hypochlorite addition system is supplied as a stand-by solution for ammonia removal in the wastewater. The sodium bisulfite dosing system is used for dechlorination.

The treated effluent from UV lights is stored in four (4) identical storage tanks (TNK-811, TNK-812, TNK-813, TNK-814). All tanks are connected with 3" PVC pipes.

Calcium Hypochlorite Concentration Control

Chemical dosing system including calcium hypochlorite tank and dosing pumps (P-813 Duty / P-814 Standby) is provided to inject calcium hypochlorite [$Ca(ClO)_2$] to the tank (TNK-811). The calcium hypochlorite dosage rate is manually set locally at the metering pump by adjusting the pump stroke. The operator must determine what the dosage rate needs to be and manually set the stroke at the pump and enter influent flow rate set point through the HMI.

The calcium hypochlorite tank is equipped with low level switch alarm (LSLL-815) indicating if tank is empty; this is to protect dry running of the pumps (P-813/P-814).

Effluent Storage System Discharge pumps / Level control

The storage tanks have two (2) external pumps (P-811 Duty / P-812 Standby) for sending treated effluent to final discharge. Each pump is equipped with discharge pressure indicator (PI-811/ PI-812) to measure the discharge pressure and motor current switch (YA-811 /YA-812).

Tank (TNK-814) is equipped with a high level switch (LSH-814) and low level switch. As long as the water level in the tank is above the low level height, pumps (P-811/P-812) will run.

Alarms

All effluent storage tanks (TNK-811/TNK-812/TNK-813/TNK-814) are equipped with level switches alarm (LSHH-801/LSHH-802 /LSHH-803/LSHH-804) for indicating imminent overflow; an alarm signal will register on the HMI and the flashing red beacon light will illuminate, operator intervention is required.

© 2013 by **newterra**, ltd.
All rights reserved. No part of this document may be reproduced or transmitted in any form or by any means, electronic, mechanical, photocopying, recording, or otherwise, without prior written permission of **newterra** ltd.

newterra ltd.
1325 California Avenue, Brockville, ON K6V 5Y6
200 555 11th Ave SW, Calgary, AB, T2R 1P6
(800) 420-4056 / www.newterra.com

Sodium Bisulfite Concentration Control

Chemical dosing system including sodium bisulfite tank and metering pumps (P-815 Duty / P-816 Standby) is provided to inject sodium bisulfite [$Na_2S_2O_5$] to the discharge line for effluent dechlorination. The sodium bisulfite dosage rate is manually set locally at the metering pump by adjusting the pump stroke. The operator must determine what the dosage rate needs to be and manually set the stroke at the pump and enter influent flow rate set point through the HMI.

The sodium bisulfite tank is equipped with low level switch alarm (LSLL-815/LSLL-816) indicating if tank is empty; this is to protect dry running of the pumps (P-815/P-816).

5.1.2.5 Sludge Treatment Module (SLUDGE BLD-7904)

Excess waste activated sludge (WAS) from the aeration tanks (TNK-501) is pumped to the sludge treatment module housed inside container (SLUDGE BLD-7904), Room#1 Cl1 Div 2.

Sludge treatment module includes:

- Polymer tank (TNK-902) with mixer (M-902), and polymer transferring pump (P-902)
- Sludge mixing tank (TNK-901) equipped with level control switch, mixer (M-901), and transferring pump (P-901)
- One (1) Filter Press unit equipped with air driven hydraulic pump, and sludge dumpster
- Supernatant tank (TNK-903) equipped with level control switches, and supernatant transferring pump (P-903)
- Air compressor (C-901) equipped with oil level switch and pressure switch; air compressor located in Room #2 GP of the building (SLUDGE BLD-7904)

Polymer preparation unit

The polymer unit is used for preparation and dosing polymer solution into the mixing tank (TNK-902) for sludge treatment. The batch-wise polymer preparation process includes:

- Hydration stage, when dry polymer is added to the tank for mixing with potable water
- Blending the polymer to a homogenous and activated solution, when the gentle agitation/mixing is provided
- Dosing the polymer activated solution into the sludge mixing tank (TNK-901) for sludge treatment using air diaphragm pump (P-902)

The mixer (M-902) and the pump (P-902) are driven by compressed air supplied by air compressor (C-901). Compressed air lines are equipped with pressure indicators (P-901/P902) to measure pressure in the air lines. The mixer (M-902) and the pump (P-902) are operated manually.

© 2013 by **newterra**, ltd.
All rights reserved. No part of this document may be reproduced or transmitted in any form or by any means, electronic, mechanical, photocopying, recording, or otherwise, without prior written permission of **newterra** ltd.

newterra ltd.
1325 California Avenue, Brockville, ON K6V 5Y6
200 555 11th Ave SW, Calgary, AB, T2R 1P6
(800) 420-4056 / www.newterra.com

Sludge mixing unit

The waste activated sludge is pumped from the aeration tank (TNK-501) into the mixing tank (TNK-901) where it is mixed with the polymer solution sent by pump (P-902) from the polymer tank (TNK-902). The sludge is mixed with polymer by submersible mixer (M-911). The mixer is driven by compressed air supplied by air compressor (C-901); compressed air line is equipped with pressure indicator (P-903) to measure pressure in the air line.

Alarm

The mixing tank (TNK-901) is equipped with level switches alarm (LSHH-901) indicating imminent overflow; an alarm signal will register on the HMI and the flashing red beacon light will illuminate, operator intervention is required. If the high high condition occurs an if the sludge transfer pump is running the PLC will shit P-503 off.

Treated (flocculated) sludge is transferred from mixing tank (TNK- 901) to the filer press (FP-901) by air diaphragm pump (P-901); compressed air line is equipped with pressure indicator (P-904) for measure pressure in the air line.

Filter press

The incoming treated sludge enters the filter press (FP-901) via the center feed pipe. The center feed plates contain a recess on either side of the plates. The cylinder will be shut closed (and hence compress the plates together) with the air driven hydraulic pump and then pressurized shut with approximately 4300 PSI of pressure. When the plates are closed, a cavity is created between the plates where the sludge will be captured.

The filtered water (supernatant) exits through the filter cloth (while the solids are captured within the clothed chambers) and goes to the supernatant tank (TNK-903) by gravity.

The feed pressure of the filter press (FP-901) may start at about 25 PSI, due to the low resistance of an empty filter press. As solids accumulate in the chambers of the filter press, the feed pressure will need to be increased to maintain a stroke count of about one stroke every 1-5 seconds or until a maximum feed pressure of 100 PSI is obtained.

Once the filter press (FP-901) is filled with sludge, the feed pump (P-901) and air driven hydraulic pump are shut off and the sludge blow down process will then commence for further water removal. The air enters via air valve into the sludge chamber via the upper left hand corner of the three button plates, and exits via the bottom right hand corner of the one button plates. This process will push excess water out through the outlet manifold.

Once the sludge blown down process is complete, the filter press is ready to be opened. To open the automatic filter press, reverse the air valve on the automatic pump to allow the pump to slowly pull open the pushing plate. For opening and closing the filter press the controls are right on the hydraulics for safety reasons. It is a forward, off, reverse lever.

Now that the plates are released, index the plates one by one, and most of the sludge will fall into the sludge dumpster below the press. A sludge spatula is provided to aid in the sludge removal.

© 2013 by **newterra**, ltd.
All rights reserved. No part of this document may be reproduced or transmitted in any form or by any means, electronic, mechanical, photocopying, recording, or otherwise, without prior written permission of **newterra** ltd.

Once all plates are clean, the filter press (FP-901) is ready to be closed hydraulically. The three outlet manifold ball valves should be opened, the center feed pipe should be opened and the pump is ready to be turned on again.

Supernatant unit

The supernatant tank (TNK-903) receives spernatant from the filter press (FP-901). The tank is equipped with:

- Liquid level switches (LSL-902/LSH-902/LSHH-902)
- Pump (P-903) transferring supernatant from the supernatant tank (TNK-903) to the aeration tank (TNK-501) located in the building (AERATION BLD-7902); pump is equipped with current switch (YA-903) and pressure indicator (PI-903) for pressure control.

Level / Pump Operation and Control

The supernatant transferring pump (P-903) will run based on liquid level in the supernatant tank (TNK-903):

- Pump (P-903) run, when level switch LSL-902 is ON and YA- 903 is ON
- Pump (P-903) stops, when level switch (LSL-902) is OFF; this is to protect dry running of the pump

Alarms

LSHH-902 indicates the imminent overflow. Operator intervention is required.

© 2013 by **newterra**, ltd.
All rights reserved. No part of this document may be reproduced or transmitted in any form or by any means, electronic, mechanical, photocopying, recording, or otherwise, without prior written permission of **newterra** ltd.

5.2 Process Control System Touchscreen Operation

The MicroClear™ MBR system is designed to be fully automatic. Since the unit operates through a touchscreen, simply press the screen in an area where a button or text appears.

5.2.1 Main Control Screen

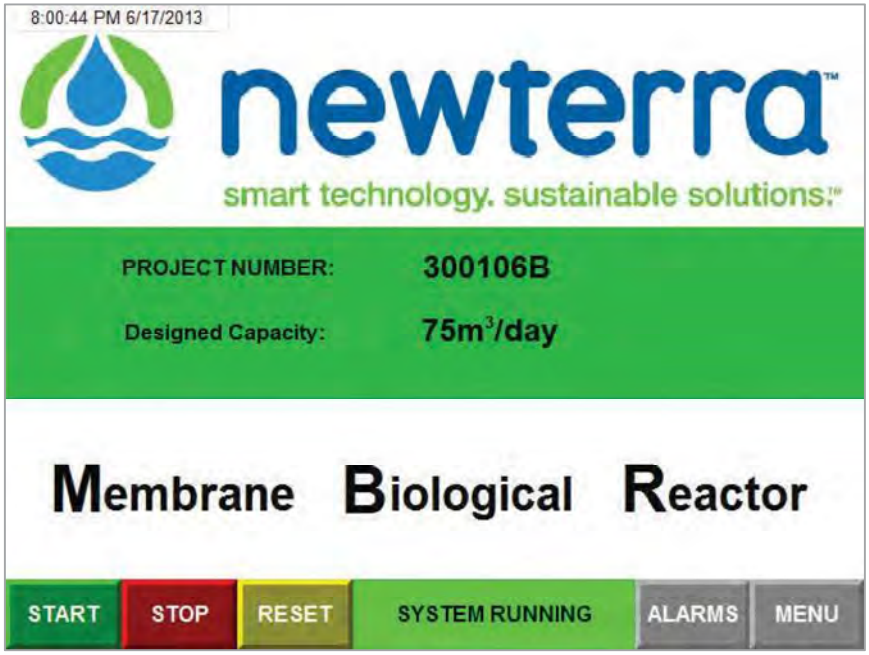

System Operation Commands

- **START** button puts the system in **RUN** mode
- **STOP** button stops the system operation. Some equipment continues to run even after this **STOP** button has been pressed, however the **E-STOP** button (located on the panel front) will stop all equipment
- **RESET** button is used to clear alarms after they have been addressed
- **SYSTEM ON (RUNNING) / SYSTEM OFF** indicates whether the system is currently in RUN mode or turned off
- **ALARM** button - when it is flashing red (it is on), it indicates an alarm is present in the system. Press **ALARMS** button to be routed to the alarm screen
- **MENU** button is used for screen navigation to show individual screens

© 2013 by **newterra**, ltd.
All rights reserved. No part of this document may be reproduced or transmitted in any form or by any means, electronic, mechanical, photocopying, recording, or otherwise, without prior written permission of **newterra** ltd.

newterra ltd.
1325 California Avenue, Brockville, ON K6V 5Y6
200 555 11th Ave SW, Calgary, AB, T2R 1P6
(800) 420-4056 / www.newterra.com

5.2.2 Process Screens

The main process screens are accessed from the main menu by pressing either the “BIOLOGY” button or the “MBR SYS” button.

On the main process screens, switches are displayed as **Grey** when **OFF, Green** when **ON** and **Red** when in alarm condition.

- LSHH – level switch high high
- LSH – level switch high
- LSLL – level switch low low
- TSHH – temperature switch high high
- LSL – level switch low
- PSL – pressure switch low

Individual devices can be monitored and controlled from the process screens.

- The letter indicated beside a device shows the current operational status of that device (**H** for hand, **O** for off, **A** for automatic)
- Touching a device on the process screen will open an **HOA** popup for that device.
- Devices are shown in green if they are currently running

© 2013 by **newterra**, ltd.
All rights reserved. No part of this document may be reproduced or transmitted in any form or by any means, electronic, mechanical, photocopying, recording, or otherwise, without prior written permission of **newterra** ltd.

5.2.2.1 Biological System Overview Screen

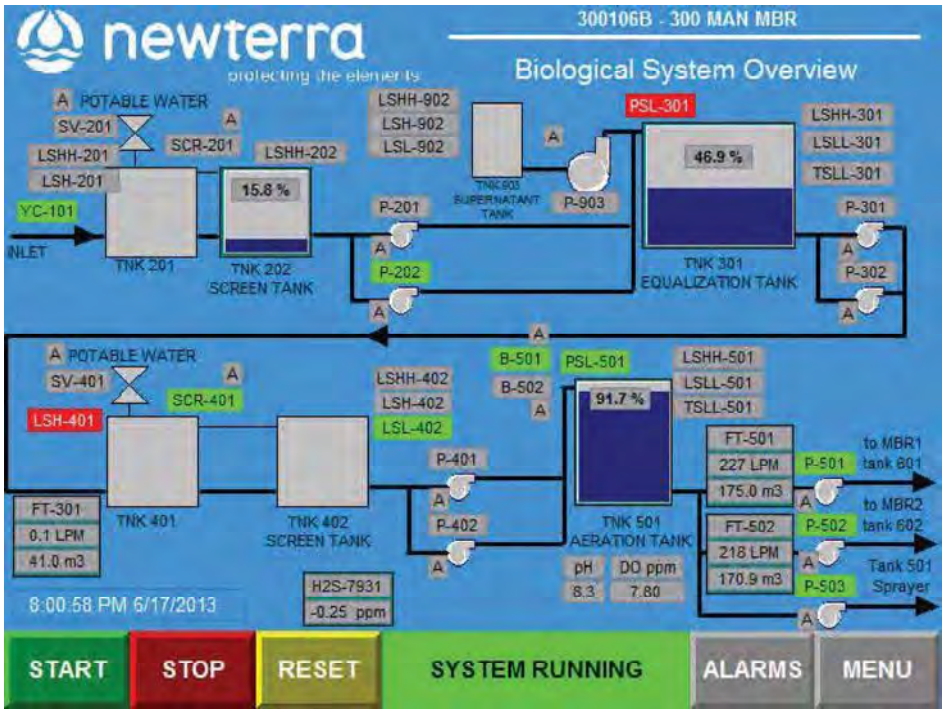

On the Biological System Overview Screen the following equipment and parameters are displayed:

- Inlet screen module (SCR-201) including screen basin (TNK-201) connected with screen tank (TNK-202), pumps and controls
- Equalization module including EQ tank (TNK-301) with controls, blowers; EQ tank level is displayed in %
- The second screen module (SCR-401) including screen basin (TNK-401) connected with screen tank (TNK-402), pumps and controls
- Aeration Tank (TNK-501) with all interconnecting piping, pumps and controls. Aeration tank level is displayed in % , dissolved oxygen (DO) and pH is displayed for the tank
- Status of blowers, pumps, level switches, flow transmitters and H_2S detector are displayed

© 2013 by **newterra**, ltd.
All rights reserved. No part of this document may be reproduced or transmitted in any form or by any means, electronic, mechanical, photocopying, recording, or otherwise, without prior written permission of **newterra** ltd.

5.2.2.2 Membrane Filtration System (MBR) Overview Screen

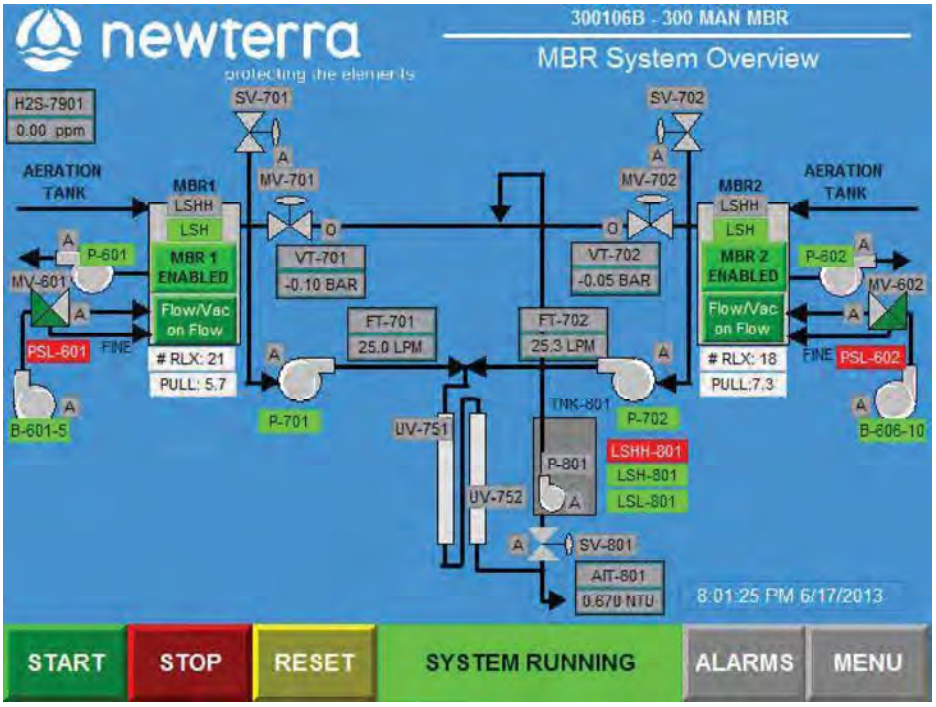

On this screen the following equipment and parameters are displayed:

- Membrane Tanks (TNK-601 and TNK-602), and Backwash Tank (TNK-801) with all interconnecting piping
- Permeate flow and vacuum are indicated for both membrane systems
- The number of relaxes performed in the current cycle is displayed
- The time on the current pull cycle is displayed
- Status of blowers, pumps, level switches, flow transmitters and H_2S detector are displayed
- The time on the current pull cycle

© 2013 by **newterra**, ltd.
All rights reserved. No part of this document may be reproduced or transmitted in any form or by any means, electronic, mechanical, photocopying, recording, or otherwise, without prior written permission of **newterra** ltd.

5.2.2.3 Permeate Storage Module Overview Screen

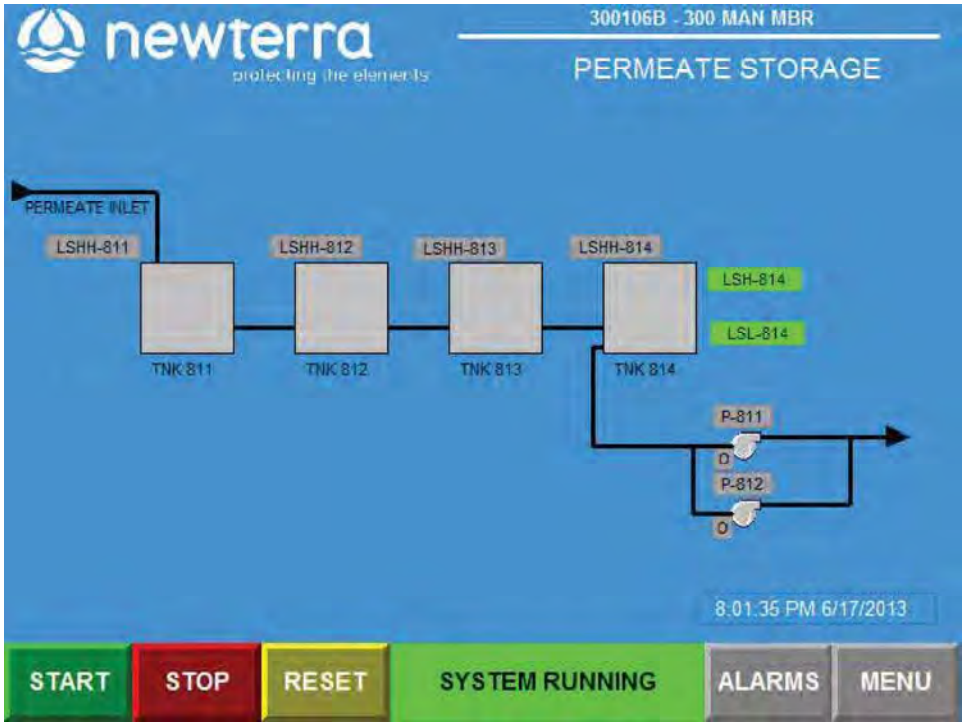

On this screen the following equipment and parameters are displayed:

- Permeate Storage Tanks (TNK-811/TNK-812/TNK-813/TNK-814) with all interconnecting piping and pumps
- Status of level switches and pumps are displayed

© 2013 by **newterra**, ltd.
All rights reserved. No part of this document may be reproduced or transmitted in any form or by any means, electronic, mechanical, photocopying, recording, or otherwise, without prior written permission of **newterra** ltd.

newterra ltd.
1325 California Avenue, Brockville, ON K6V 5Y6
200 555 11th Ave SW, Calgary, AB, T2R 1P6
(800) 420-4056 / www.newterra.com

5.2.3 Process Setpoints Screen

The **Setpoints Screen** is accessed from the main menu by pressing the **"SETPOINTS"** button. This screen allows optimization of the system operation. Once the system is correctly set up, these values **should not be changed**.

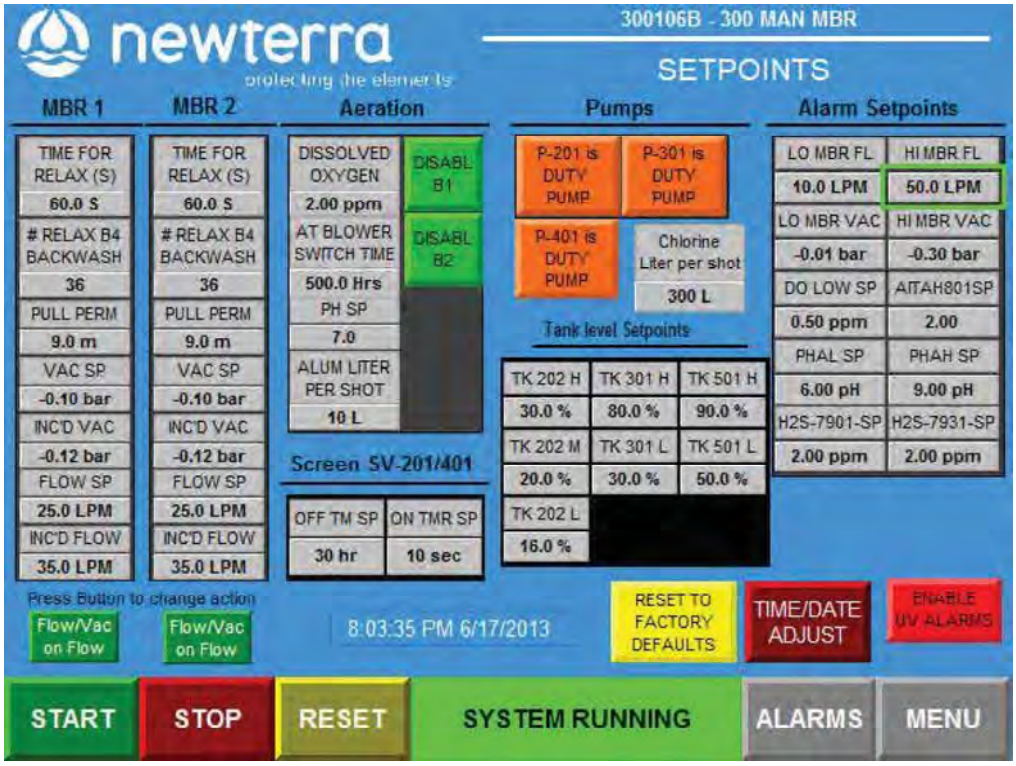

See the table on the following page for the description of setpoints.

© 2013 by **newterra**, ltd.
All rights reserved. No part of this document may be reproduced or transmitted in any form or by any means, electronic, mechanical, photocopying, recording, or otherwise, without prior written permission of **newterra** ltd.

newterra ltd.
1325 California Avenue, Brockville, ON K6V 5Y6
200 555 11th Ave SW, Calgary, AB, T2R 1P6
(800) 420-4056 / www.newterra.com

newterra MBR Operational Setpoints Description

Process Location	Setpoint	Value	Description
Inlet Screen Module (SCR-201)	OFF TMR SP	30 hr	Setpoint for the amount of time when solenoid valve (SV-201) used for potable water delivery for screen cleaning is closed (OFF)
	ON TMR SP	10 sec	Setpoint for the amount of time when solenoid valve (SV-201) used for potable water delivery for screen cleaning is open (ON)
The second Screen Module (SCR-401)	OFF TMR SP	30 hr	Setpoint for the amount of time when solenoid valve (SV-401) used for potable water delivery for screen cleaning is close (OFF)
	ON TMR SP	10 sec	Setpoint for the amount of time when solenoid valve (SV-401) used for potable water delivery for screen cleaning is open (ON)
Membranes	TIME FOR RELAX (S)	60 sec	Setpoint for the amount of time the membrane relaxes between pulls, in seconds (shown for MBR 1 & MBR 2)
	# RELAX B4 BACKWASH	36	Setpoint for the number of relaxes before a backwash is triggered.
	PULL PERM MBR 1	9 min	Setpoint for the amount of time (in minutes) the system pulls permeate from TNK-601 before relaxing
	PULL PERM MBR 2	9 min	Setpoint for the amount of time (in minutes) the system pulls permeate from TNK-602 before relaxing
	VAC 1 SP	-0.10 bar	Setpoint for the vacuum in TNK-601 (in bar) the system will put on the membrane under normal operating conditions
	VAC 2 SP	-0.10 bar	Setpoint for the vacuum in TNK-602 (in BAR) the system will put on the membrane under normal operating conditions
	INC'D 1 VAC	-0.12 bar	Setpoint for the vacuum in TNK-601 (in bar) the system will put on the membrane when the system is experiencing a high flow (typically controlled by a high level in the EQ tank)
	INC'D 2 VAC	-0.12 bar	Setpoint for the vacuum in TNK-602 (in bar) the system will put on the membrane when the system is experiencing a high flow (typically controlled by a high level in the EQ tank)

© 2013 by **newterra**, ltd.
All rights reserved. No part of this document may be reproduced or transmitted in any form or by any means, electronic, mechanical, photocopying, recording, or otherwise, without prior written permission of **newterra** ltd.

newterra ltd.
1325 California Avenue, Brockville, ON K6V 5Y6
200 555 11th Ave SW, Calgary, AB, T2R 1P6
(800) 420-4056 / www.newterra.com

Process Location	Setpoint	Value	Description
Membranes	FLOW 1 SP	25.0 LPM	Normal flow setpoint for permeate flow rate (in LPM) in TNK-601. Under normal operation the system will default to this setpoint
	FLOW 2 SP	25.0 LPM	Normal flow setpoint for permeate flow rate (in LPM) in TNK-602. Under normal operation the system will default to this setpoint
	INC'D 1 FLOW	35.0 LPM	Increased Flow setpoint for permeate flow rate (in LPM) in TNK-601. If LSH-301 is activated the system will use the Increased Flow setpoint.
	INC'D 2 FLOW	35.0 LPM	Increased Flow setpoint for permeate flow rate (in LPM) in TNK-602. If LSH-301 is activated the system will use the Increased Flow setpoint.
Aeration Tank	DISSOLVED 0XYGEN	2.00 ppm	Setpoint for the amount of dissolved oxygen in ppm in the aeration tank
	AT BLOWER SWITCH TIME	500.0 Hrs	Setpoint for switching between aeration tank blowers under normal operation. The switch time is usually 500hrs.
	pH SP	7.0	Setpoint for the pH level in the aeration tank
	ALUM LITER PER SHOT	10 L	Setpoint for the amount of alum (L) added in the aeration tank
Tank Level Setpoint	TK 202 H	30.0 %	Setpoint for the high level (in %) for the screen tank (TNK-202)
	TK 202 M	20.0 %	Setpoint for the medium level (in %) for the screen tank (TNK-202)
	TK 202 L	16.0 %	Setpoint for the low level (in %) for the screen tank (TNK-202)
	TK 301 H	80.0 %	Setpoint for the high level (in %) for the equalization tank (TNK-301)
	TK 301 L	30.0 %	Setpoint for the low level (in %) for the equalization tank (TNK-301)
	TK 501 H	90.0 %	Setpoint for the high level (in %) for the aeration tank (TNK-501)
	TK 501 L	50.0 %	Setpoint for the low level (in %) for the aeration tank (TNK-501)

© 2013 by **newterra**, ltd.
All rights reserved. No part of this document may be reproduced or transmitted in any form or by any means, electronic, mechanical, photocopying, recording, or otherwise, without prior written permission of **newterra** ltd.

newterra ltd.
1325 California Avenue, Brockville, ON K6V 5Y6
200 555 11th Ave SW, Calgary, AB, T2R 1P6
(800) 420-4056 / www.newterra.com

newterra MBR Alarm Setpoints Description

Alarm Setpoints	LO MBR FL	10.0 LPM	If the discharge flow is below this setpoint for more than 5 minutes, an alarm will be initiated.
	HI MBR FL	50.0 LPM	If the discharge flow is higher this setpoint for more than 5 minutes, an alarm will be initiated.
	LO MBR VAC	-0.01 bar	If the vacuum on the membrane is below this setpoint for more than 60 seconds, an alarm will be initiated.
	HI MBR VAC	-0.30 bar	If the vacuum on the membrane is higher this setpoint for more than 60 seconds, an alarm will be initiated.
	DO LOW SP	0.50 ppm	If the dissolved oxygen in the aeration tank is below this setpoint for more than 15 minutes, an alarm will be initiated.
	AITAH801SP	2.0 ppm	If the % solids in the aeration tank is above this setpoint an alarm will be initiated.
	PHAL SP	6.00 pH	If the pH in the aeration tank is below this setpoint for more than 15 minutes, an alarm will be initiated.
	PHAH SP	9.00 pH	If the pH in the aeration tank is higher this setpoint for more than 15 minutes, an alarm will be initiated.
	H_2S-7901-SP	2.00 ppm	If the concentration of detected H_2S reaches this setpoint for more than 5 minutes, an alarm will be initiated.
	H_2S-7931-SP	2.00 ppm	If the concentration of detected H_2S reaches this setpoint for more than 5 minutes, an alarm will be initiated.

© 2013 by **newterra**, ltd.
All rights reserved. No part of this document may be reproduced or transmitted in any form or by any means, electronic, mechanical, photocopying, recording, or otherwise, without prior written permission of **newterra** ltd.

ATTENTION

The following screen shows **setpoints** modification procedure. **Setpoints** should only be modified under the direction of **newterra** engineers to prevent damaging the membranes.

RESET TO FACTORY DEFAULT (yellow button) - Pressing this button will reset all process and alarm setpoints to the default values at the factory.

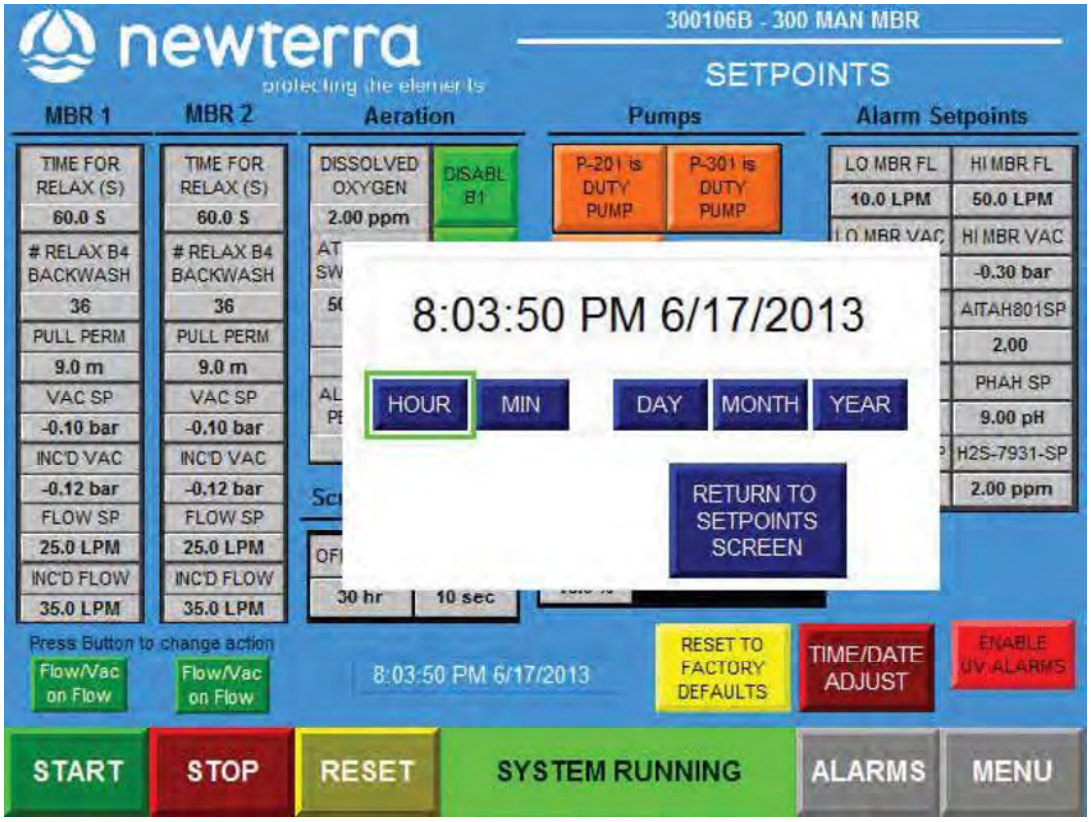

© 2013 by **newterra**, ltd.
All rights reserved. No part of this document may be reproduced or transmitted in any form or by any means, electronic, mechanical, photocopying, recording, or otherwise, without prior written permission of **newterra** ltd.

5.2.4 System HAO's (HAND /AUTOs/ OFF)

The **Hand / AUTO / OFF** screen is accessed from the main menu by pressing the "**HAO**" button.



- Each PLC controlled motor or valve in the system has **a Hand/Auto/Off (HAO)** Switch to control its operation. This screen displays all the system HAO's
- For normal operation, all switches should be in the **AUTO (A)** position
- The **HAND (H)** position of a switch is used for testing and troubleshooting of the system. As a safety precaution to prevent damage to equipment, the equipment will operate for two minutes in hand mode and will then return to the **OFF (O)** position

© 2013 by **newterra**, ltd.
All rights reserved. No part of this document may be reproduced or transmitted in any form or by any means, electronic, mechanical, photocopying, recording, or otherwise, without prior written permission of **newterra** ltd.

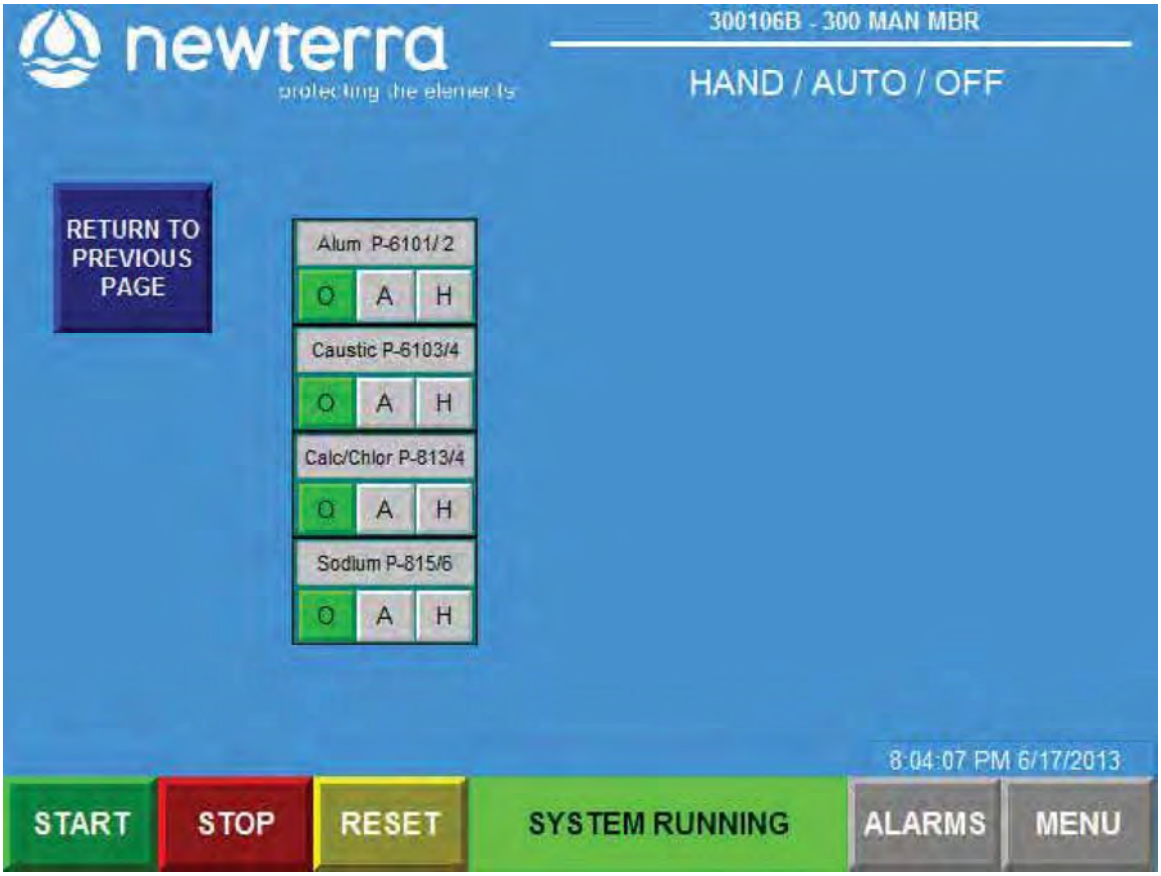

© 2013 by **newterra**, ltd.
All rights reserved. No part of this document may be reproduced or transmitted in any form or by any means, electronic, mechanical, photocopying, recording, or otherwise, without prior written permission of **newterra** ltd.

5.2.5 Motor Info Control Screen

The following screen shows the status of the VFD's and their PID control values.



© 2013 by **newterra**, ltd.
All rights reserved. No part of this document may be reproduced or transmitted in any form or by any means, electronic, mechanical, photocopying, recording, or otherwise, without prior written permission of **newterra** ltd.

5.2.6 Moto Hours Control Screen

Motor Hours screen is accessed from the main menu by pressing the “Motor Hours” This screen shows the total number of hours that each motor can run.

- When the SERVICED button is pressed, it resets the hours since service to zero (0)
- When the REPLACED button of a motor is pressed, it resets the total hours to zero (0).



© 2013 by **newterra**, ltd.
All rights reserved. No part of this document may be reproduced or transmitted in any form or by any means, electronic, mechanical, photocopying, recording, or otherwise, without prior written permission of **newterra** ltd.

5.2.7 System Totals

The **System Totals** Screen is accessed from the main menu by pressing the **"TOTALS"** button

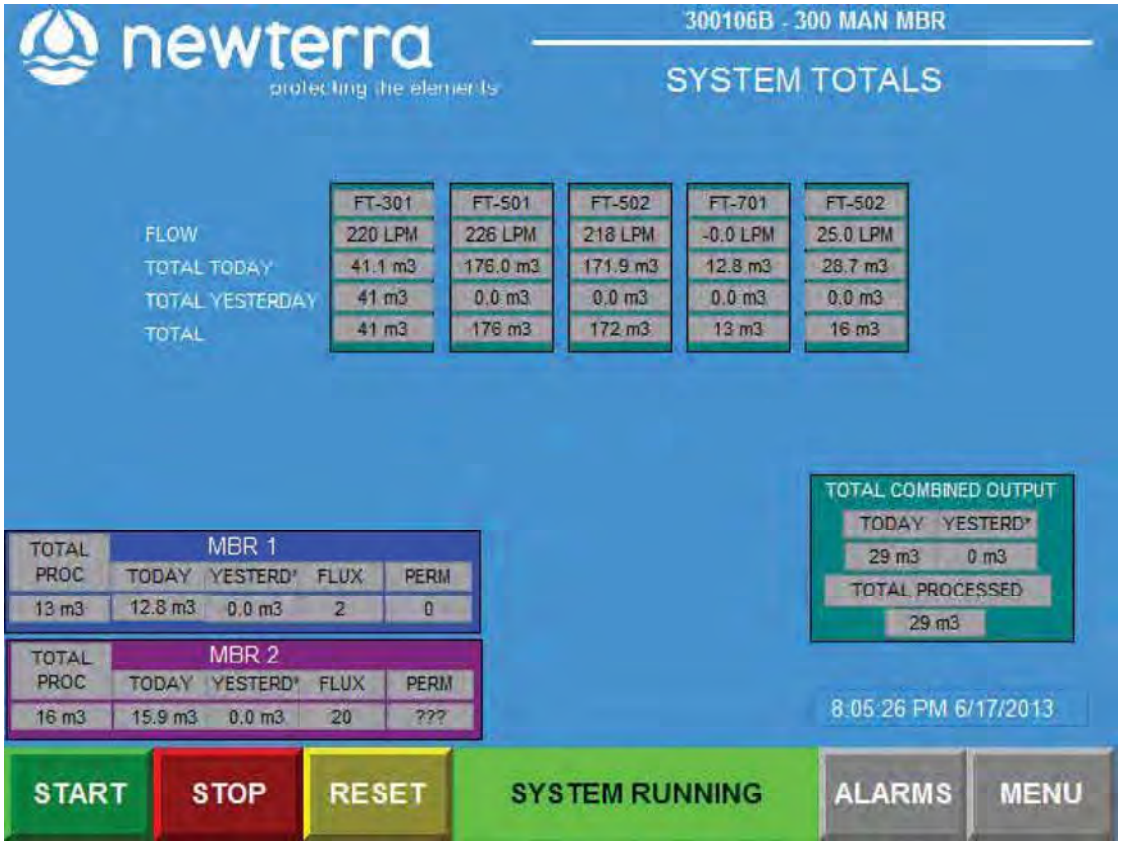

This screen is used to show:

- The total amount of water processed through the process train, and also current (today) amount and amount of water processed yesterday
- Flux (**J**) for membrane unit expressed in **LMH (L/m²·h)**
- Permeability **(K)** for membrane unit expressed in **LMH/bar**

© 2013 by **newterra**, ltd.
All rights reserved. No part of this document may be reproduced or transmitted in any form or by any means, electronic, mechanical, photocopying, recording, or otherwise, without prior written permission of **newterra** ltd.

5.2.8 System Data Log Screens

- The following screens show how system is setup with extensive dada log to keep a history of the performance.
- It shows real time data log of critical process operating parameters
- This information is saved on a USB stick that is located on the front of the control panel
- The LOG INTERVAL setting determines how often data points are stored. The factory default setting is 600 seconds

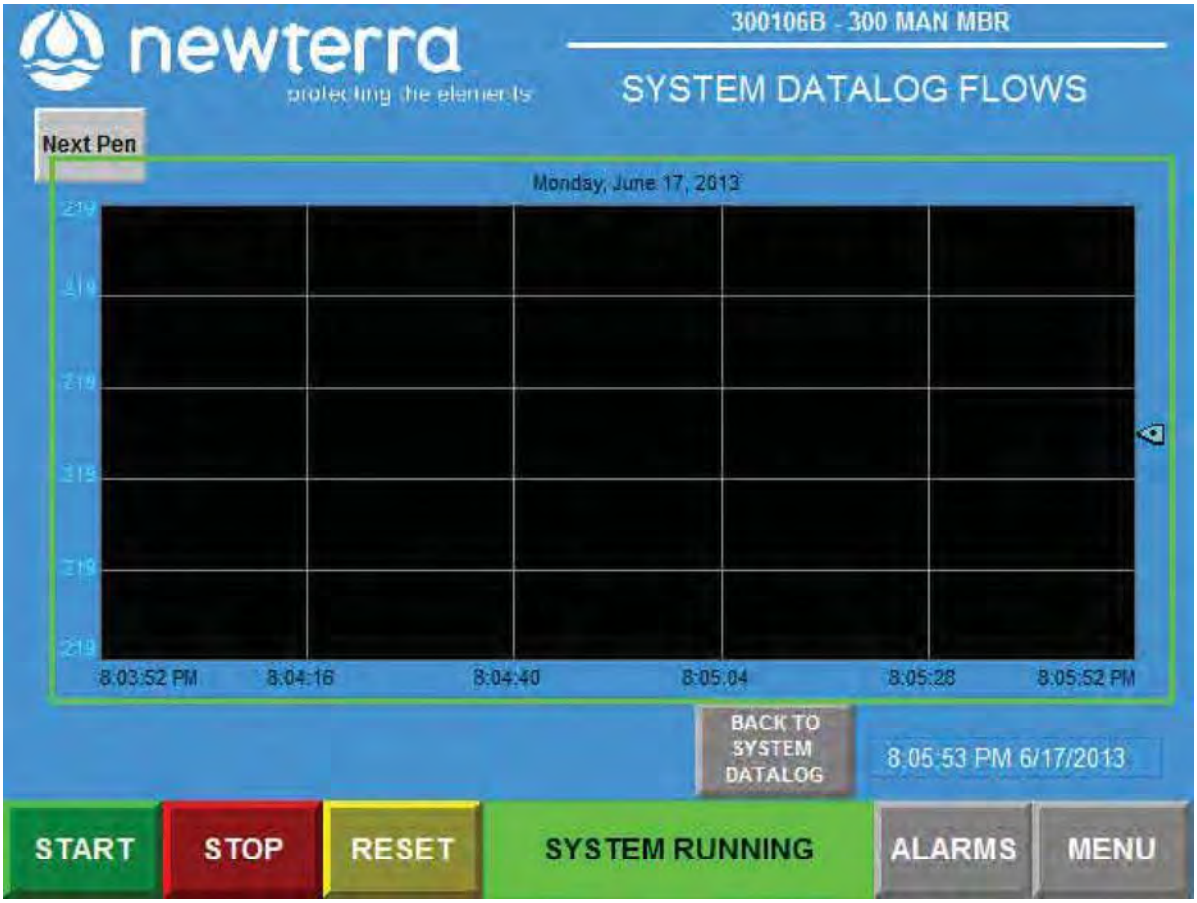

© 2013 by **newterra**, ltd.
All rights reserved. No part of this document may be reproduced or transmitted in any form or by any means, electronic, mechanical, photocopying, recording, or otherwise, without prior written permission of **newterra** ltd.

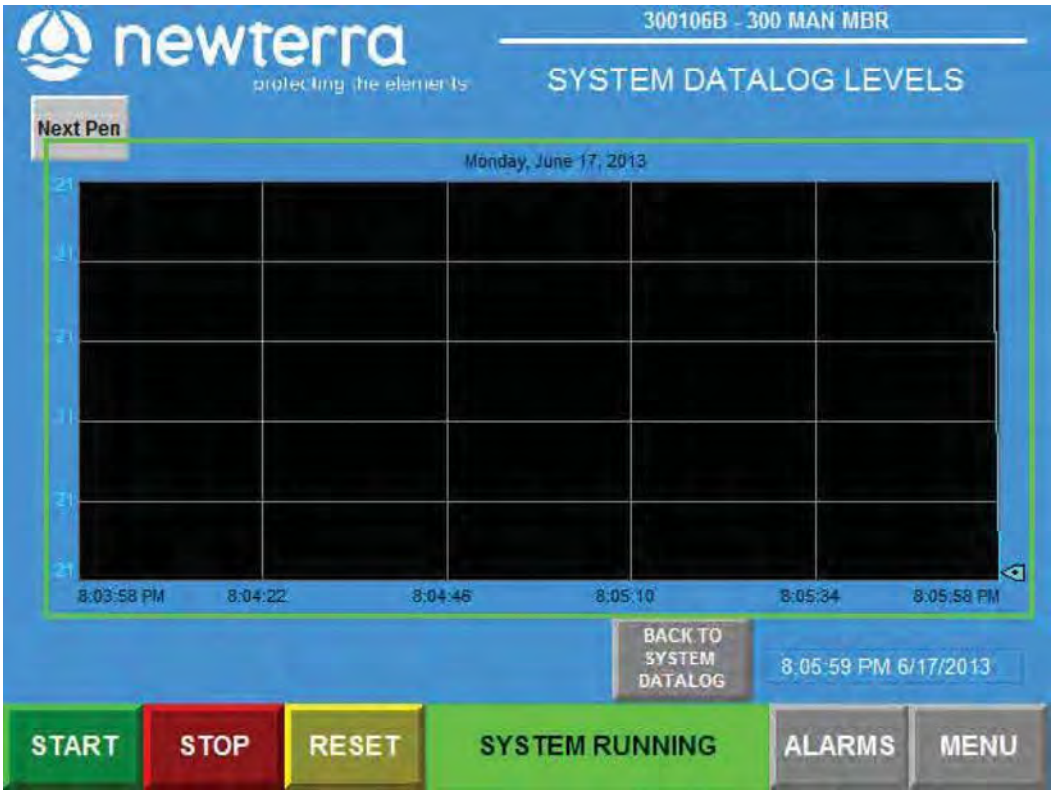

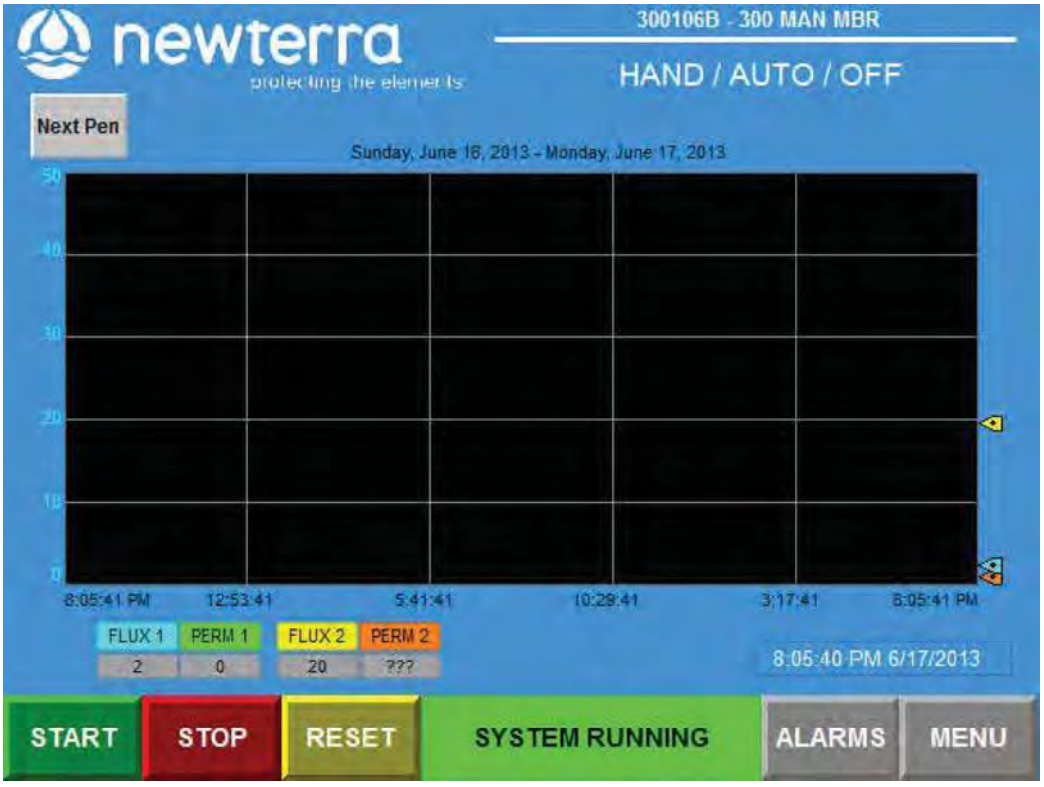

© 2013 by **newterra**, ltd.
All rights reserved. No part of this document may be reproduced or transmitted in any form or by any means, electronic, mechanical, photocopying, recording, or otherwise, without prior written permission of **newterra** ltd.

6.0 PLANT START-UP, OPERATING GUIDELINES AND MONITORING

6.1 Plant Start-Up

Mechanical & Electrical Start-up Procedure:

- If the system is being started for the first time, work your way through the **newterra Pre-Commissioning Test Checklist** presented in **Appendix C** of this O&M Manual.
- If the kill switch on the panel (red mushroom shaped button) is pulled out, then push it in to confirm that the MBR system is off.
- Push the reset button on the operator interface to reset all alarms.
- Make sure there are no obstructions over any moving parts, for example a jacket laying on a belt drive.
- Put all HAND/OFF/AUTO switches to AUTO **(A)** mode.
- Pull the kill Button (red button on panel) out to start the process.
- Push the start button on the Operator Interface.

Process Start-up:

Seeding

The procedure for determining the amount of seed sludge required for process start-up, and methods for seeding the system are as follows:

1. Calculate the volume of seed sludge required to ensure that there is a minimum of 3,000 mg/L MLSS in the membrane tank. The volume of seed sludge required can be calculated with the following formula.

$$V_s = \frac{3000 \times V_t}{MLSS_s}$$

V_s: Total volume of seed sludge for MBR system (m^3)
V_t: Total volume of process tanks in MBR system (m^3)
$MLSS_s$: MLSS concentration of seed sludge from a similar treatment system (mg/L)

2. Arrange for delivery of fresh seed sludge from an activated sludge system employing a suspended growth type process. If it is possible, obtain seed sludge from a facility treating a similar wastewater and operated with similar processes (nitrification etc).

© 2013 by **newterra**, ltd.
All rights reserved. No part of this document may be reproduced or transmitted in any form or by any means, electronic, mechanical, photocopying, recording, or otherwise, without prior written permission of **newterra** ltd.

3. Drain the water used for clean water testing from the reactor, if the returned activated sludge (MLSS<10,000 mg/L) is used. Do not drain the water after clean water testing, if the dewatered sludge is used.

4. **Screen all seed sludge with the 2 mm basket screen** before the sludge is transferred to the aeration or membrane tanks **to remove gross solids and rags and hair**.

5. Remove grit from the screen if required.

6. Once the tanks are fully seeded in aeration tank and membrane tank is turned on, the system can start to work. Do not waste sludge, as membrane filtration continues, until the MLSS in the aerobic or membrane tank becomes concentrated to the targeted concentration. The system will be started at a reduced design flow/loading initially per **newterra** start-up schedule.

7. Foaming may occur during start-up, which is normal. However, after a period of time (1 week), the foam should disappear. Foaming can be addressed by water spraying, food based defoamer **(silicone based defoamer is strictly prohibited**) addition, or aeration minimization in the membrane tank.

8. If a defoamer is required, contact **newterra ltd**. for recommendation of an acceptable antifoaming agent and dosing quantities.

9. Process start-up and adaptation periods can last for two or three weeks.

10. If fresh activated seed sludge is not available, **newterra** can supply dry cultures bacteria (a consortia group of different kinds of bacteria) for start-up. Please consult newterra ltd; quantities of dry bacteria and procedure of seeding will be confirmed by newterra technical representative during commissioning / start-up period.

ATTENTION	No untreated wastewater should enter the membrane tank. Make sure wastewater is completely biologically treated before it gets to the membrane tank

ATTENTION	It is advisable to start the MBR system with a minimum MLSS concentration of 3,000 mg/L to minimize foaming. The seed sludge should come from a plant which has a screen of 2 mm. It is critical to screen the seed sludge with 2 mm perforated screen prior to seeding for membrane protection.

© 2013 by **newterra**, ltd.
All rights reserved. No part of this document may be reproduced or transmitted in any form or by any means, electronic, mechanical, photocopying, recording, or otherwise, without prior written permission of **newterra** ltd.

6.2 System Operating Guidelines and Monitoring

6.2.1 Operating Guidelines

The operators are expected to run the MBR system at all times in accordance with the maintenance, operational procedures and details specified in this manual. The following two tables provide operating parameters that can be easily maintained, and define the range of operating values.

There may be situations where the system needs to operate outside of the conditions covered in this manual. If these conditions develop, please consult newterra ltd. to discuss operation and methods to optimize performance.

Generally, the following points can be used to operate the MBR system properly:

1. The MBR system is designed to treat wastewater with specified influent characteristics.
2. Never operate the MBR tank below the minimum membrane submerged level. It is necessary to maintain a minimum of 250 mm liquid level above the membrane modules to ensure they are wet at all times and to allow for proper filtration.
3. Always supply the required amount of air for scouring to the membrane module.
4. Always filter wastewater at or below design flow rate.
5. Periodically, relax the membranes by ending filtration while allowing the membrane aeration scour to operate continuously and initiate backwash operation during membrane relaxation (default relaxation mode preset in PLC - permeation continues for 9 min and stops for 45 sec, and backwash the membrane).
6. Always operate the MBR in accordance with the parameters listed in the following tables.
7. Clean the membranes in-place with a dilute chemical in accordance with **Section 7** of the O&M Manual.

Membrane Filtration Operational Conditions

Parameter	Recommended Value	Notes
Diffuser Relaxation	10 minutes/day	Effluent filtration must be turned off, blower shuts down for 10 mins/day
Relax Time	1 min/10 min	Filtration must be off and blower are operating continuously
Backwahing	48 cycles	Built-in backwash mode during relaxation mode
In-situ Chemically Enhanced Backwash (CEB)	200 ppm as NaOCl	Requires 3 L to fully backwash one MCXL cassette. Frequency of CEB may vary. Refer to Membrane Cleaning Section 7.3 for cleaning procedure.

© 2013 by **newterra**, ltd.
All rights reserved. No part of this document may be reproduced or transmitted in any form or by any means, electronic, mechanical, photocopying, recording, or otherwise, without prior written permission of **newterra** ltd.

Avg Flux Rate	15 LMH (9 gpd)	Average flux rate with permeation 9 minutes out of 10 minutes
TMP	< 0.2 bar (2.9 psi)	Membranes to be cleaned once the TMP exceeds 0.2 bar (2.9 psi)

MBR – Recommended Biological Operational Conditions

Parameter	Recommended	Range	Notes
MLSS (mg/L)	10,000	8,000 – 15,000	Never operate the membranes if MLSS < 3,000 mg/l. Sludge wasting should be undertaken as required to maintain target MLSS
Temperature (°C)	15 - 35	10 – 35	Avoid sudden changes in temperature. Minimum operating temperature is 15 °C
pH (s.u.)	6.8 - 8.5	6.0 – 9.0	Membrane module can handle a change in pH, however it is recommended to keep pH between 6.8 - 8.5
Aeration Tank, DO (mg/L)	≥ 2.0	1.0 – 8.0	This can be maintained by adjusting the volume of air supplied to the aeration tank
Viscosity (mPa-s)	Not applicable	0 – 300	–
Membrane Tank to Aeration Tank Recirculation	400%	200 – 600%	–
F:M (kg BOD/kg MLSS/d)	0.1	0.03 – 0.2	F:M = [Flow (m^3/d) x BOD conc (mg/l)] / [Process volume (m^3) x MLSS conc (mg/l)]
F:M (kg COD/kg MLSS/d)	0.15	0.05 – 0.3	F:M = [Flow (m^3/d) x BOD conc (mg/l)] / [Process volume (m^3) x MLSS conc (mg/l)]
SRT	> 15	12 – 50	

Process Troubleshooting Guide is presented in **Appendix M** of this O&M Manual.

© 2013 by **newterra**, ltd.
All rights reserved. No part of this document may be reproduced or transmitted in any form or by any means, electronic, mechanical, photocopying, recording, or otherwise, without prior written permission of **newterra** ltd.

newterra ltd.
1325 California Avenue, Brockville, ON K6V 5Y6
200 555 11th Ave SW, Calgary, AB, T2R 1P6
(800) 420-4056 / www.newterra.com

6.2.2 Sampling

To ensure accurate system monitoring and the validity of laboratory test data, samples must be collected as outlined below. These are only recommended guidelines. It is imperative that scheduled testing protocols are performed in compliance with local regulatory agency requirements. Composite samples of the MBR systems may need to be sent out to a certified laboratory for testing, based on the local regulatory requirements

Monitoring and Testing Requirements

Parameter***	Influent	Aeration Tank	Membrane Tank	MBR Effluent
Flow rate	D (PLC)			D (PLC)
Fat, Oil and Grease (FOG)	AR			AR
Alkalinity	AR			
Biological Oxygen Demand (BOD)	W			W
Total Suspended Solids (TSS)	W			W
Total Kjeldahl Nitrogen / Total Nitrogen (TKN / TN)	M			AR
Ammonia Nitrogen(NH_4-N)				AR
Nitrate Nitrogen (NO_3-N)				AR
Total Phosphorus (TP)	W			W
Mixed Liquor Suspended Solids (MLSS)			W	
Mixed Liquor Volatile Suspended Solids (MLVSS)			AR*	
Temperature		D (PLC)		
pH	AR	D (PLC)		W
Dissolved Oxygen (DO)		D (PLC)		
Filterability			TW	
Turbidity				AR**
Fecal Coliform / *E-Coli*				W

Legend: D = daily; W = weekly; TW = three times weekly; M = monthly; AR = as required.

* If MLVSS /MLSS ratio of a minimum of 0.7 is detected, MLVSS testing can be done periodically, on an "as required" basis.

**The effluent should be routinely checked for any signs of problem. Normally, the effluent is reasonably clear, colourless, and odourless. If the effluent becomes turbid, testing should be carried out required.

*** Explanation and definition of abbreviations, acronyms and terms used in the manual are presented in **Appendix G – Glossary & Terms and Appendix H – Biological Treatment & Monitoring Parameters.**

© 2013 by **newterra**, ltd.
All rights reserved. No part of this document may be reproduced or transmitted in any form or by any means, electronic, mechanical, photocopying, recording, or otherwise, without prior written permission of **newterra** ltd.

Filterability Test

The objective of the filterability test is to evaluate the condition of the working biomass. This is assessed by measuring the volume of filtrate passing through the filter paper. If filtrate is greater than 10 mL/10 min, then biomass filterability is acceptable; however, if it is less than 10 mL/10 min, modifications to the plant operating condition are required to prevent premature membrane fouling.

Laboratory Glassware and Filter Paper

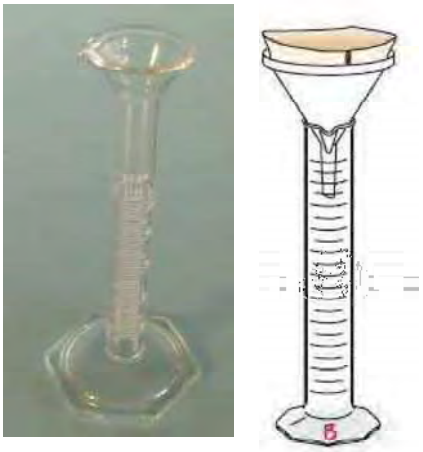

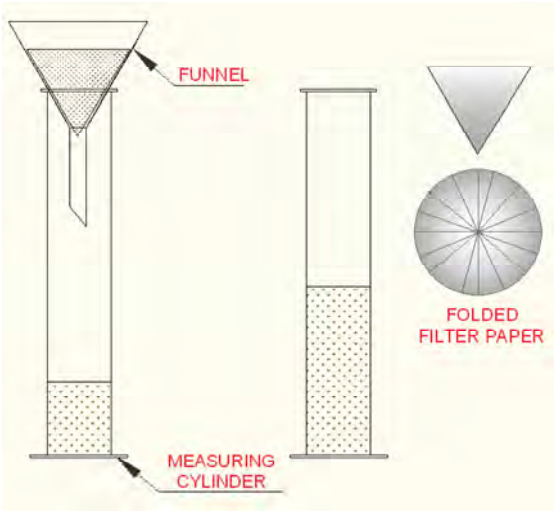

Apparatus:

Filterability Kit is distributed by **newterra ltd (Part # 24146).**

Filterability Kit includes:

- Filter paper distributed;
- Funnel (75 mm diameter recommended);
- 2 - 50 mL graduated cylinder;

Stop watch

© 2013 by **newterra**, ltd.
All rights reserved. No part of this document may be reproduced or transmitted in any form or by any means, electronic, mechanical, photocopying, recording, or otherwise, without prior written permission of **newterra** ltd.

newterra ltd.
1325 California Avenue, Brockville, ON K6V 5Y6
200 555 11th Ave SW, Calgary, AB, T2R 1P6
(800) 420-4056 / www.newterra.com

Measurement Procedure:

1. Pleat filter paper by folding in half, quarters etc.
2. Line the funnel with pleated filter paper and place the funnel in the graduated cylinder.
3. Collect 50 mL of activated sludge sample in a beaker and stir.
4. Pour the 50 mL sample into the funnel.
5. Start timer when the first drop of water filtered through the filter paper.
6. After 10 minutes of filtration, record the level of filtrate in the graduated cylinder.

Filterability (FT)	Action	State of urgency
> 10 ml	Excellent, no action req'	
5 - 10 ml	Tweak process operation	
< 5 ml	Process adjustment req	Contact newterra ltd.

6.2.3 Record Keeping

An essential component of quality control in any facility is sound record keeping. A log book covering the entire treatment system performance should be maintained, updated, and readily accessible to all operators. The log book should be used to record observations, set point alterations, and unusual conditions.

For each wet chemistry parameter analysis, a separate work-sheet has to be prepared. Work-sheet data for at least the previous year should be kept for possible consultation.

The second step in quality control is to train all operators to follow an established procedure for each test. Identical samples should be periodically tested for any parameter by different operators, and the variability among results should be compared. Consistent variability in results may lead to the technique improvement of operators.

Duplicate analysis of a sample should also regularly be done. And, split samples should regularly be sent to an outside accredited laboratory and analysis results should be compared with those done in-house.

In addition to summary sheets, it is highly recommended that data should be entered into prepared Excel spread-sheets. Spread-sheets greatly aid in the data presentation and manipulation, and would be of immeasurable value when report writing is required.

© 2013 by **newterra**, ltd.
All rights reserved. No part of this document may be reproduced or transmitted in any form or by any means, electronic, mechanical, photocopying, recording, or otherwise, without prior written permission of **newterra** ltd.

6.2.4 Process Trending

Other than pre-planned process changes or major upsets, process modifications should be based on trends shown in the process data. A trend is nothing more than an indication of real change in a process parameter over time. A trend chart is simply a graph of data being trended.

As the graph changes, upward or downward trends are detectable. Smoothing trends by graphing the 3-, 7-, or 30-day average of the data allows the trend to be shown more clearly. Because the individual data point may be questionable, the actual value of data point are less important compared with the trend regarding the process monitoring.

Trend graphs are a part of the Excel data spread-sheet; the operator can trend and analyse many parameters in just a few minutes in order to assess process performance.
When a trend is identified, its indication to the process can be evaluated, and corrective action may be carried out, if needed. Statistically, the more data points there are in a trend chart, the more reliable the trend.

© 2013 by **newterra**, ltd.
All rights reserved. No part of this document may be reproduced or transmitted in any form or by any means, electronic, mechanical, photocopying, recording, or otherwise, without prior written permission of **newterra** ltd.

7.0 SYSTEM MAINTENANCE



CAUTION: Shut off all electrical power before working on the mechanical or electrical equipment.

The system should be routinely checked for any signs of operational problems. Such problems could include, but are not necessarily limited to, abnormally high peak flows, unpleasant odour, and diffuser clogging, and so on.

7.1 Plant Visual Checks

Noise	During normal operation, there is a uniform humming sound at the plant. In case of an unusual noise, it could be an indication that the blower needs maintenance or repairs.
Smell	The MicroClear™ MBR is an aerobic system. During normal operation, the system has an earthy smell similar to that of a well-maintained compost pile. If other odours are noticed, the aeration process may not be operating or the system has been overloaded. Check the DO manually and the blower to verify proper operation.
Sight	Normally, the effluent is reasonably clear, colourless, and odourless. If the effluent becomes turbid, there is a pin hole in the membrane or a leakage in the piping. Take the unit out of operation and investigate. **Check uniformity of membrane air distribution periodically to ensure air scoring is effective across all membrane plates.**

© 2013 by **newterra**, ltd.
All rights reserved. No part of this document may be reproduced or transmitted in any form or by any means, electronic, mechanical, photocopying, recording, or otherwise, without prior written permission of **newterra** ltd.

7.1.1 Air Scouring Patterns in Membrane Tanks

Membrane air scouring check is essential procedure for **newterra** MBR WWTP. Air scour has to be observed for uniformity of bubbling action all across the membrane module/cassette on regular basis.

A visual inspection of the aeration patterns should be performed with the liquid level 2-3" (5 – 7.5 cm) above the permeate pipe.



Proper air scouring in membrane tank



Uneven aeration in membrane tank

It is easy to observe aeration patterns through clear window in membrane tank. Operator should note any unusual patterns of air distribution. The visual inspection also should be performed before any membrane cassette removal from membrane tank. Operator has to check for:

- damage of air diffusers - if this occurs, empty the tank and fix the diffuser;
- air leakages - if this occurs, tighten up the fittings.

If there is insufficient air scouring, localized dewatering (**clogging, sludging, caking and plugging**) may occur and may in turn lead to membrane fouling.

© 2013 by **newterra**, ltd.
All rights reserved. No part of this document may be reproduced or transmitted in any form or by any means, electronic, mechanical, photocopying, recording, or otherwise, without prior written permission of **newterra** ltd.

newterra ltd.
1325 California Avenue, Brockville, ON K6V 5Y6
200 555 11th Ave SW, Calgary, AB, T2R 1P6
(800) 420-4056 / www.newterra.com

7.2 Schedule for Routine Operation and Maintenance Checkups (if Applicable)

Location	Item	Day	Week	Month	Quarter	Year	Comments
HEADWORKS	**Inspect and maintain grease trap in the kitchen of the work/mining camp**		X	X*			*Kitchen grease trap(s) should be checked weekly and cleaned monthly to ensure proper performance.
	Inspect lift station with sump pumps		X				
	Remove grease from lift stations and top of PC tank		X				
PROCESS	**Perform visual check**	X					Refer to Plant Visual Checks
	Check for proper wasting to sludge system		X				
	Record permeate flow rate	X					
	Record DO in the aeration tank	X					
	Record pH in the aeration tank	X					
	Record vacuum pressure at the membranes	X					Normal range: 0.07 – 0.15 bar (28" -61" WC)
Note: When the vacuum at the membranes reaches 0.2 bar/2.9 psig/80" WC), stop the permeation and perform recovery cleaning (please see procedure separately)							
MECHANICAL & PROCESS	**Inspect membranes and permeate withdrawal system**		X				1 hour
	Clean and calibrate the DO sensor			X			1 hour
	Inspect and maintain valves & fittings for leaks		X				
	Clean manually Fine Screen and direct solids to primary settling/sludge holding tank		X				may require daily cleaning during start-up (subject to PI502 reading)
	Membrane in-situ cleaning				X		2-4 hours
	Remove membrane module for mechanical cleaning and inspection					X	Drain membrane tank. Roll out membrane cassette. Remove membranes and inspect. (1 -2 days)
	Visual inspection of air bubbles in the equalization, aeration and membrane tanks		X				Replace diffusers if big uneven bubbles/high turbulence is found.

© 2013 by **newterra**, ltd.
All rights reserved. No part of this document may be reproduced or transmitted in any form or by any means, electronic, mechanical, photocopying, recording, or otherwise, without prior written permission of **newterra** ltd.

newterra ltd.
1325 California Avenue, Brockville, ON K6V 5Y6
200 555 11th Ave SW, Calgary, AB, T2R 1P6
(800) 420-4056 / www.newterra.com

Location	Item	Day	Week	Month	Quarter	Year	Comments
MECHANICAL & PROCESS	**Remove, inspect and maintain diffusers in equalization, aeration and membrane tanks**					X	This involves a complete draining of tanks (1-2 days)
	Pump out solids collected in the primary settling/sludge holding tank for offsite disposal				X		
	Check and record UV instrumentation: % Transmissivity vs required minimum; Remaining Lamp Life; Total Days of Operation		X				
	Inspect and maintain pump bearings			X			
	Check blower operation (if vibrating)		X				
	Check time clock setting		X				
	De-ragger (foam suppression unit)						may require daily cleaning during start-up
	Inspect functionality of baseboard heater				X		
	Check ventilation systems for container					X	
ELECTRICAL	**Check electrical leads**				X		
	Inspect and maintain breakers, fuses, resets and anodes			X			
	Check motor mounting bolts			X			
	Clean dust away from electric motor			X			
	Check PLC and control panel functionality		X				



All connections (hoses, hose clamps, camlocks) have to be checked periodically (on a monthly basis) to make sure all of them are in good conditions.

© 2013 by **newterra**, ltd.
All rights reserved. No part of this document may be reproduced or transmitted in any form or by any means, electronic, mechanical, photocopying, recording, or otherwise, without prior written permission of **newterra** ltd.

7.2.1 De-ragger operation and maintenance cleaning

Please refer to the drawing presented in **Appendix A** of this O&M Manual.

De-ragger is part of the anti-foaming system which is provided in the system for foam suppression in the aeration tank. The main purpose of a de-ragger in this system is to avoid the spray nozzles clogging by catching fibres and other impurities found in the recirculation water pumped through the system.

De-ragger is simple equipment consisting of a PVC clear pipe, a nylon bristle brush installed in the pipe, and a fernco coupling for quick disconnection. During the water spraying process the brush (with a sliding fit in the pipe) catches fibres and other impurities
.
When the de-ragger is filled with impurities, perform maintenance as follows:

- Turn off P-503 operation.
- Close 2' PVC isolation valve and open 1' PVC drain valve and drain the content to a 20-L pail.
- Disconnect fernco coupling.
- Remove brush and rinse with clean water.
- Close the drain valve and reassemble the fernco coupling.
- Make sure all connections are tight.
- Open isolation valve.
- Turn on P-503 operation.

7.2.2 Polymer Make-up Instructions

Please refer to the P&I Diagram presented in **Appendix A** of this O&M Manual.

1. Fill polymer make up tank (conical bottom mixing tank) with 100L clean water
2. Open air mixer speed valve by turning valve one and a half revolutions (1 ½) to allow mixer to run at high speed
3. Slowly add 1 cup (~250ml) of Powdered CC4509 polymer into vortex beside mixer shaft (keep bag sealed when not in use)
4. Run mixer on high speed for 5 min
5. Reduce mixer speed to low by turning value back to half (1/2) a revolution open, continue mixing for 45 min
6. Polymer is now ready to use

© 2013 by **newterra**, ltd.
All rights reserved. No part of this document may be reproduced or transmitted in any form or by any means, electronic, mechanical, photocopying, recording, or otherwise, without prior written permission of **newterra** ltd.

7.3 Membrane Cleaning

7.3.1 Membrane In-situ Chemically Enhanced Backflush (CEB)



Chemical cleaning is only to be carried out by qualified and trained personnel! Chemicals can lead to serious injuries. Always wear personal protective equipment (PPE) when handling chemicals! Obey the chemical safety handling procedure as listed in the Material Safety Data Sheets.

It is recommended that in-situ CEB be carried out before the TMP exceeds 0.2 bar (or permeability drops rapidly to 50 LMH/bar) This is typically done once every couple weeks/months depending on biomass characteristics and system operating condition.

On certain occasions, membrane module/cassette may need to be physically inspected for membrane integrity if membrane permeability performance is not recovered after the cleaning (i.e., suspect of membrane deterioration); please refer to subsection **7.3.3**.



The maximum backwash pressure of MicroClear™ MCXL filter is 0.1 bar or equivalent to a 100 cm water line. Only use gravity force to perform the backflush.

Note: Membrane have a maximum active chlorine tolerance of 100,000 ppm.h.

For better cleaning performance, it is recommended:

- Potable water (permeate is acceptable if potable water is unavailable)
- Water temperature is above 20 ^{0}C (better cleaning efficiency if water temperature ranges from 20 to 30 ^{0}C)

Procedure

Note: Only clean (backwash) one membrane tank at time.

© 2013 by **newterra**, ltd.
All rights reserved. No part of this document may be reproduced or transmitted in any form or by any means, electronic, mechanical, photocopying, recording, or otherwise, without prior written permission of **newterra** ltd.

***Step 1: Cleaning with sodium hypochlorite (NaOCl)* - 3L cleaning solution required per MCXL cassette for in-situ CEB. The CEB is performed manually.**

1) Press the disable membrane button on the screen.

2) Open valve (SV-801) and allow water to fill up the backwash tank (T-801) to LSH-801 level.

3) Close valve (SV-801).

4) Add concentrated NaOCl into the backwash tank to a concentration of 500 mg/L (acceptable range of 200 to 1,000 mg/L).

Volume of concentrated NaOCl required can be calculated with the following formula,

$$V_x = \frac{V_m \times 0.05}{C_s}$$

V_m: Volume of the solution (Gallon, or Litre), equal to 3 L multiplying the number of MCXL cassettes;
C_s: Concentrated NaOCl concentration (%)
V_x: Volume of concentrated NaOCl required (Gallon, or Litre)

5) Open valve (MV-701 or MV-702) and inject chemical solution by pump (P-801) into membrane tank (TNK-601 or TNK-602) until reach LSL-801 level in backwash tank. (T-801).

6) Soak the membranes in NaOCl solution for 1-2 h. Adjust air scour in interval, if necessary, to control potential foaming.

7) Resume normal operation by turning off the disable membrane button. Check permeability. Normal permeability after cleaning: 150 to 300 LMH/bar.

8) Repeat the cleaning procedures if the normal permeability value is not attained.

Step 2: Cleaning with Citric Acid – only required in case of inorganic fouling caused by the high hardness.



Rinse membrane filter thoroughly with potable water to completely remove NaOCl solution before treatment with citric acid. Mixing NaOCl with citric acid releases toxic chlorine gas!

1) Repeat the above steps with 0.2% citric acid solution (a max of 2%)

© 2013 by **newterra**, ltd.
All rights reserved. No part of this document may be reproduced or transmitted in any form or by any means, electronic, mechanical, photocopying, recording, or otherwise, without prior written permission of **newterra** ltd.

7.3.2 Membrane Recovery Cleaning

The membrane recovery cleaning is to be done once a year at a minimum. On certain occasions, membrane cassette may need to be inspected for membrane integrity (suspect of membrane deterioration, membrane permeability performance does not recover after the cleaning, etc.).



Disable operation of the dedicated membrane tank that needs to be cleaned by pressing the disable membrane button on the screen.

For better cleaning performance, it is recommended:

- Potable water is used
- Water temperature is above 20 ^{0}C (better cleaning efficiency if water temperature ranges from 20 to 30 ^{0}C)

Procedure

Step 1: Cleaning with Sodium Hypochlorite (NaOCl)

1. Drain all mixed liquor from the membrane tank to the sump/recycle back to the process tanks.

2. Clean (wash down) the membrane tank with potable water and drain the dirty liquid to the sump/recycle back to headwork.

3. Turn off air scour, fill the membrane tank with potable water until the membranes are completely covered, and add NaOCl into the membrane tank to a concentration of 500 mg/L as free chlorine (max. 1,000 mg/L). Turn on air scour for 5 min to mix the solution and turn it off during membrane soak.

   Volume of NaOCl required can be calculated with the following formula:

$$V_x = \frac{V_m \times 0.05}{C_s}$$

V_m: Volume of membrane tank (Gallon, or Litre)
C_s: NaOCl concentration (%)
V_x: Volume of NaOCl required (Gallon, or Litre)

© 2013 by **newterra**, ltd.
All rights reserved. No part of this document may be reproduced or transmitted in any form or by any means, electronic, mechanical, photocopying, recording, or otherwise, without prior written permission of **newterra** ltd.

4. Keep the membranes soaked for a min 12 hours in the NaOCl solution (longer soak time required if severe fouling is evident). Air scour can be on intermittently during soak time (5 min every 4 hrs).

5. Drain spent NaOCl solution to the sump/recycle to headwork.

6. Rinse membrane filter thoroughly with potable water and drain the entire tank. Rinse waters are drained to the sump/recycle back to the headwork.

Step 2: Cleaning with Citric Acid – only required in case of inorganic fouling caused by the high hardness



Rinse membrane filter thoroughly with potable water to completely remove NaOCl solution before treatment with citric acid. Mixing NaOCl with citric acid releases toxic chlorine gas!

1. Fill the membrane tank with potable water, turn on scouring air, and add citric acid to pH 2.0. Turn off air scour when the pH of 2.0 is reached.
2. Keep the membranes soaked in the citric acid solution for 2 hours (longer soak time required if severe fouling is evident).
3. Drain spent citric acid solution, rinse membranes thoroughly with potable water and drain all the rinse waters. Spent citric acid solution and rinse waters are drained to the sump/recycle back to headwork.

Step 3: *Resume normal operation*

Step 4: Checking Permeability on Clean Water

Normal permeability after cleaning: 150 to 300 LMH/bar.

Repeat the cleaning procedures If normal permeability is not achieved.

Note: Membrane maintenance (CEB) and recovery cleaning has to be recorded according to Membrane Cleaning Log Sheet presented in Appendix K of the manual.

© 2013 by **newterra**, ltd.
All rights reserved. No part of this document may be reproduced or transmitted in any form or by any means, electronic, mechanical, photocopying, recording, or otherwise, without prior written permission of **newterra** ltd.

7.3.3 Membrane Physical Check



WARNING*: A membrane cassette that has been in operation weighs more than dry membrane cassette before installation.*
Failure to comply with the instructions provided in this manual can cause equipment & property damage or severe personal injury, and will render the warranty null and void.

To remove membrane module from membrane tank

This procedure is required if the membranes are being inspected as part of routine maintenance for physical check or being replaced.



Once membrane inspection or replacement has begun, it must be completed promptly. It is important that the membrane DO NOT DRY OUT OR FREEZE during this procedure.

1. Lifting the membrane cassette out of a tank or emptying a tank should take at least 5 min. For each single filter layer.

MicroClear™ Membrane Module	Filter Layers	Acceptable time for membrane filter lifting out of the membrane tank or empting the tank
MB2- series	2	10 min
MB3- series	3	15 min
MB4- series	4	20 min (module must be separated in to 2 parts)
MB5- series	5	25 min (module must be separated in to 2 parts)

Note: Non observance will lead to damage of the filters because of exceeding the maximum backwash pressure.

© 2013 by **newterra**, ltd.
All rights reserved. No part of this document may be reproduced or transmitted in any form or by any means, electronic, mechanical, photocopying, recording, or otherwise, without prior written permission of **newterra** ltd.

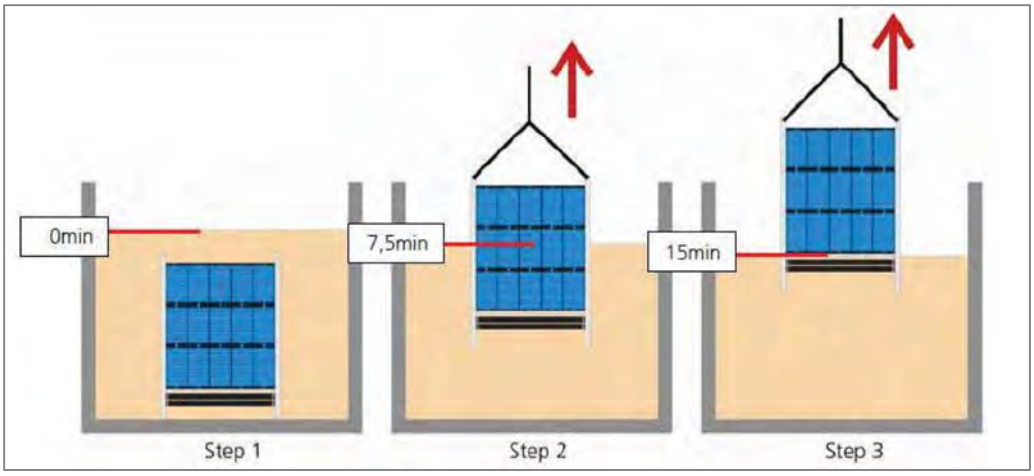

Schematic of MicroClear™ membrane module lifting / emptying of the membrane tank

Membrane module replacement

If membranes require changing *v*erify membrane modules are secure within the membrane tanks after re-installing the modules – i.e. verify wheel chocks are in the correct location and that there is no lateral movement (less than an inch) of the membrane modules on the wheel tracks in the tank.

© 2013 by **newterra**, ltd.
All rights reserved. No part of this document may be reproduced or transmitted in any form or by any means, electronic, mechanical, photocopying, recording, or otherwise, without prior written permission of **newterra** ltd.

newterra ltd.
1325 California Avenue, Brockville, ON K6V 5Y6
200 555 11th Ave SW, Calgary, AB, T2R 1P6
(800) 420-4056 / www.newterra.com

8.0 SHUT DOWN

8.1 Temporary Shut Down

A temporary shutdown for a few days requires continuous aeration of the biomass to keep the DO level at least 2 mg/L and continues biomass recycle between the bioreactors.

8.2 Permanent Shut Down / Winterizing

Permanent shut-down is required if system operation stops at least for 2 weeks without inflow. Permanent Shut Down includes the following procedure:

- Perform membrane cleaning before permanent shut down / winterizing.
- Drain all tanks.
- Remove membranes and winterize
    - For short term storage (up to 6 months): soak membranes in 10 ppm NaOCl solution, and membranes are not allowed to dry out), never expose the membrane unit to frost, dust, rain, or direct sunlight.
    - For long term storage: soak membranes in preservation solution - 20 % glycerin solution (by weight).The glycerin will pass through the membrane via diffusion and provides pore protection from freezing and from drying out.
- Disassemble all PVC ball valves and drain any water inside (open and close to ensure trapped water escapes).
    - Leave all valves ½ open during reinstallation
- Open all drain valves and leave open.
- Clean and reinstall all sprayer nozzles.
- Find all check valves and make sure water is not being held by valve (Wet/Dry Vac works well here).
- Drain / remove all pumps from tanks, ensure no water is left inside the pump.
- Use RV biodegradable Antifreeze to
    - Refill any check valve
    - Dump in 2 (qty) 4-L bottles in each tank
- Remove pH and DO probes (if unit is equipped) and store with membranes in a heated area ensure probes are kept wet.
- Remove power from system.

© 2013 by **newterra**, ltd.
All rights reserved. No part of this document may be reproduced or transmitted in any form or by any means, electronic, mechanical, photocopying, recording, or otherwise, without prior written permission of **newterra** ltd.

Double check and ensure that there is no water left in any pipes, fittings etc. If it is not possible to remove the water fill with antifreeze.

Glycerine Solution Solution Components and Solution Make-Up

1. Chemicals:
Technical Glycerin (86.5%)
Distilled water

2. Solution make-up procedure:

Dissolve technical glycerin (86.5%) in water and homogenize according the following table.

Preservation Solution 20 % Glycerin	Technical Glycerin [86,5%]	Distilled Water
[kg]	[kg]	[kg]
1	0.23	0.75
10	2.3	7.5
100	23	75
1000	230	750

The preservation solution has a density of 1,045 g/cm^3. The concentration of preservation solution can be tested and corrected with a density meter.

Membrane preservation procedure

- Allow the membrane unit to soak in preservation solution for a few hours.
- Remove the membrane unit and allow excess glycerin to drain.
- Shrink wrap the unit with a thick (1.5 mm) plastic bag and seal membrane unit using a hand sealer or tape.



For long term storage preserved unit should be stored in a cool (4^{0}C - 20^{0}C), dry area, away from direct sunlight and protected from accidental damage.

Re-commissioning the unit is straight forward. Once unit is lowered into MBR Tank, first start the aeration, then the permeate pump. In order to let all the traces of glycerin in the permeate to dissipate, make the arrangement for the permeate to recycle back to the aeration tank for the first half hour.

© 2013 by **newterra**, ltd.
All rights reserved. No part of this document may be reproduced or transmitted in any form or by any means, electronic, mechanical, photocopying, recording, or otherwise, without prior written permission of **newterra** ltd.

newterra ltd.
1325 California Avenue, Brockville, ON K6V 5Y6
200 555 11th Ave SW, Calgary, AB, T2R 1P6
(800) 420-4056 / www.newterra.com

9.0 SERVICE & SUPPORT

Commissioning and Start-up

newterra MicroClear™ MBR System's **commissioning & start-up** is the last step of the **newterra** project execution process. Experienced engineers and technicians are available to assist clients in these procedures including system initial set up and primary start-up and providing all performance tests according to the pre-commissioning checklist.

Initial on-site training program is an important part of the commissioning service as well. During on-site training, **newterra** technical representative will cover process monitoring, system operation, maintenance, and troubleshooting activities related to the **newterra** ™MBR System. Customized training packages are available. Contact **newterra** for more information.

Post commissioning Services

A comprehensive range of post commissioning services is available from within **newterra** beyond system design and installation. Specific services are included:

- Technical support (including after-hours emergency telephone support).
- Spare parts order and delivery.
- Training program.
- Plant optimization and upgrades.
- Telemetry control and monitoring.
- Assistance in preparing system performance reports (process data monitoring & analysis).
- Preventive maintenance cleaning (including membrane cleaning).
- System audits for reviewing the performance of all MBR subsystems and the efficiency.

1. **Technical support** is available to assist in troubleshooting of **newterra** MBR system during normal working hours 8:30 am to 5:00 pm (Eastern Time Zone for **newterra** ltd.). Telephone service is available via **1.800.420.4056.**

Emergency **24/7 telephone technical support –** This will be activated upon subscribing to **newterra's** 24/7 technical support service.

If problem cannot be resolved through telephone or e-mail supports, **newterra** engineers are available for site visit.

© 2013 by **newterra**, ltd.
All rights reserved. No part of this document may be reproduced or transmitted in any form or by any means, electronic, mechanical, photocopying, recording, or otherwise, without prior written permission of **newterra** ltd.

Appendix F - Steensby and Rail Camps Freshwater Supply, Sewage and Wastewater – Plans for Future Work

The information contained herein is proprietary Baffinland Iron Mines Corporation and is used solely for the purpose for which it is supplied.
It shall not be disclosed in whole or in part, to any other party, without the express permission in writing by Baffinland Iron Mines Corporation.

Note: This is an UNCONTROLLED COPY. All staff members are responsible to ensure the latest revision is used.

There will be no construction and development of Steensby and the Rail camps in the near future. Updates to these sections of the Plan will be done when required and will be included in a future Annual Report to NWB as required by Part B, Item 4 of existing Type A Water Licence. Block Flow Diagrams for Steensby and Railway Camps will be updated when required.

A.1 Freshwater

A.1.1 Freshwater System Process Description

A.1.1.1 Steensby Port Site

Currently, there are no construction activities planned for Steensby Inlet. During the future construction phase the on-site population will be approximately 600 people. Half the camp personnel will be accommodated on a barge which will be equipped with potable water treatment systems. The potable system onboard the barge will be a reverse osmosis based system. The full configuration will include coagulation, filtration by media filter, reverse osmosis and chemical disinfection. The remaining personnel will be accommodated by a land based potable water treatment system. This system will continue to operate during the operation phase while the barge based system will only be used during the construction phase.

The existing fresh water equipment will not be used and a new fresh water distribution system will be installed. The fresh water demand for construction and operation are shown on the drawing Steensby Site - Water Supply Balance Block Flow Diagram in Appendix C.

For the land based system, a heated and insulated pump house will be built at Lake ST347 with duty/standby pumps to deliver fresh water to a fresh water tank (located in close proximity to the new potable water treatment plant). Water from this tank will be used to provide fire water as well as meet the fresh water requirements of the site. A stand pipe within the tank will ensure that fire water is always available in the tank. Some fresh water requirements such as road dust suppression, stockpile dust suppression, concrete and explosives manufacturing will be provided directly from nearby lakes using a vacuum truck.

The land based potable water treatment scheme will consist of coagulation followed by media filtration and disinfection by ultraviolet radiation. The water will then undergo a secondary disinfection by sodium hypochlorite injection to ensure residual chlorine content at the point of use. The applicable guidelines specify minimum required levels of chlorine residual free chlorine. The barge based potable water treatment scheme will include the same equipment as well as a membrane based system to desalinate the seawater source.

The information contained herein is proprietary Baffinland Iron Mines Corporation and is used solely for the purpose for which it is supplied.
It shall not be disclosed in whole or in part, to any other party, without the express permission in writing by Baffinland Iron Mines Corporation.

Note: This is an UNCONTROLLED COPY. All staff members are responsible to ensure the latest revision is used.

A.1.1.2 Mid-Rail Site

Currently, there are no construction activities planned for the Mid-Rail Site. During the future construction phase, the on-site population will be approximately 200 people. A new potable water treatment system and fresh water distribution system will be put in place to support the construction phase operations. The fresh water demand for construction and operation are shown on the drawing Mid-Rail - Water Supply Balance Block Flow Diagram in Appendix C.

A heated and insulated pump house will be built at an adjacent Unnamed Lake with duty/standby pumps to deliver fresh water to a fresh water tank during summer. During the winter, water will be trucked from Ravn Camp Lake to the fresh water tank. This tank will be located in close proximity to the new potable water treatment plant. Water from this tank will be used to provide fire water as well as meet the fresh water requirements of the site. A stand pipe within the tank will ensure that fire water is always available in the tank. Some fresh water requirements such as road dust suppression and tunnel drilling will be provided directly from nearby lakes by vacuum truck.

The potable water treatment scheme will consist of coagulation followed by media filtration and disinfection by ultraviolet radiation. The water will then undergo a secondary disinfection by sodium hypochlorite injection to ensure residual chlorine content at the point of use. The applicable guidelines specify minimum required levels of chlorine residual free chlorine.

A.1.1.3 Ravn River Site

Currently, there are no construction activities planned for the Mid-Rail Site. During the future construction phase, the on-site population will be approximately 400 people. A new potable water treatment system and fresh water distribution system will be put in place to support the construction phase operations. The fresh water demand for construction and operation are shown on the drawing Ravn River - Water Supply Balance Block Flow Diagram in Appendix C.

A heated and insulated pump house will be built at Ravn Camp Lake with duty/standby pumps to deliver fresh water to a fresh water tank (to be located in close proximity to the new potable water treatment plant). Water from this tank will be used to provide fire water as well as meet the fresh water requirements of the site. A stand pipe within the tank will ensure that fire water is always available in the tank. Some fresh water requirements such as road dust suppression and tunnel drilling will be provided directly from nearby lakes by vacuum truck.

The potable water treatment scheme will consist of coagulation followed by media filtration and disinfection by ultraviolet radiation. The water will then undergo a secondary disinfection by sodium hypochlorite injection to ensure residual chlorine content at the point of use. The applicable guidelines specify minimum required levels of chlorine residual free chlorine.

The information contained herein is proprietary Baffinland Iron Mines Corporation and is used solely for the purpose for which it is supplied.
It shall not be disclosed in whole or in part, to any other party, without the express permission in writing by Baffinland Iron Mines Corporation.

Note: This is an UNCONTROLLED COPY. All staff members are responsible to ensure the latest revision is used.

A.1.1.4 Cockburn Tunnels Camp Site (Cockburn North Camp)

Currently, there are no construction activities planned for the Cockburn Tunnels Camp Site. During the future construction phase, the on-site population will be approximately 100 people. A new potable water treatment system and fresh water distribution system will be put in place to support the construction phase operations. The fresh water demand for construction and operation are shown on the drawing Cockburn Lake Tunnels Camp - Water Supply Balance Block Flow Diagram in Appendix C.

A heated and insulated pump house will be built at Cockburn Lake with duty/standby pumps to deliver fresh water to a fresh water tank (located in close proximity to the new potable water treatment plant). Water from this tank will be used to provide fire water as well as meet the fresh water requirements of the site. A stand pipe within the tank will ensure that fire water is always available in the tank. Some fresh water requirements such as road dust suppression and tunnel drilling will be provided directly from nearby lakes by vacuum truck.

The potable water treatment scheme will consist of coagulation followed by media filtration and disinfection by ultraviolet radiation. The water will then undergo a secondary disinfection by sodium hypochlorite injection to ensure residual chlorine content at the point of use. The applicable guidelines specify minimum required levels of chlorine residual free chlorine.

A.1.1.5 Cockburn South Camp Site

Currently, there are no construction activities planned for the Cockburn South Camp Site. During the future construction phase, the on-site population will be approximately 400 people. A new potable water treatment system and fresh water distribution system will be put in place to support the construction phase operations. The fresh water demand for construction and operation are shown on the drawing Cockburn South - Water Supply Balance Block Flow Diagram in Appendix C.

A heated and insulated pump house will be built at Cockburn Lake with duty/standby pumps to deliver fresh water to a fresh water tank (located in close proximity to the new potable water treatment plant). Water from this tank will be used to provide fire water as well as meet the fresh water requirements of the site. A stand pipe within the tank will ensure that fire water is always available in the tank. Some fresh water requirements such as road dust suppression and tunnel drilling will be provided directly from nearby lakes by truck.

The potable water treatment scheme will consist of coagulation followed by media filtration and disinfection by ultraviolet radiation. The water will then undergo a secondary disinfection by sodium hypochlorite injection to ensure residual chlorine content at the point of use. The applicable guidelines specify minimum required levels of chlorine residual free chlorine.

The information contained herein is proprietary Baffinland Iron Mines Corporation and is used solely for the purpose for which it is supplied.
It shall not be disclosed in whole or in part, to any other party, without the express permission in writing by Baffinland Iron Mines Corporation.

Note: This is an UNCONTROLLED COPY. All staff members are responsible to ensure the latest revision is used.

A.2 Sewage Treatment

A.2.1 Sewage Treatment Process Description

A.2.1.1 Steensby Site

During the construction and operation phase the camp population will increase to approximately 600 people. There is no planned construction at Steensby Site in the immediate future.

During construction start-up, sewage generated by the workforce will be treated in an existing sewage treatment plant that is on-site but not yet installed. During the construction phase, 300 people will be accommodated by a temporary sewage treatment system in place for the construction period. In addition, the temporary sewage treatment plant will be designed to process raw or partially treated sewage from the Cockburn Lake rail camps which will be conveyed to the Steensby temporary sewage treatment facility by truck. The remaining workforce will be accommodated by a permanent sewage treatment system which will remain in service during the operation phase.

These sewage treatment plants will be housed in a temperature controlled areas and as such their performance will not be negatively impacted by arctic conditions.

Effluent from the sewage treatment plants will be stored in effluent tanks. The effluent tanks will have a hydraulic retention time of two days (at minimum) based upon nominal flows. It is intended that the effluent tank will be at a low level during operation such that if sampling indicates that the effluent quality does not meet the applicable criteria further discharge can be prevented for a period in excess of a day to allow this effluent to be mixed, retreated, and retested. In addition this retention volume will allow for a minimal amount of recirculation through the STP using any spare STP capacity. This will improve the quality of the final effluent in the tank. The volume is sufficient to allow for periodic sampling and testing of the treated effluent before discharge or reuse. The new permanent sewage treatment facility will be RBC based technology or superior. Treated effluent will be discharged to the ocean.

The equalization tank that feeds the temporary sewage treatment plant will be sized to accommodate the sewage from the Cockburn Lake and Cockburn South rail camps. The rail camp sewage will be added during periods of low sewage generation at Steensby in order to reduce excessive surge volumes building up in the tank.

The sludge generated will be dewatered using a mechanical dewatering device such as belt filter or filter press and then incinerated. Sludge cake will be stored in an animal proof secure area. Odour generation will be limited because the sludge will be aerobically digested, dewatered and incinerated regularly such that the sewage cake is not stored for significant periods. Odour control carbon vents will be installed where deemed necessary. The incinerator design will consider the solids content of the sludge from the dewatering device.

The information contained herein is proprietary Baffinland Iron Mines Corporation and is used solely for the purpose for which it is supplied.
It shall not be disclosed in whole or in part, to any other party, without the express permission in writing by Baffinland Iron Mines Corporation.

Note: This is an UNCONTROLLED COPY. All staff members are responsible to ensure the latest revision is used.

The equalization tank that feeds the new sewage treatment plant will be sized to accommodate the sewage from the Cockburn Lake and Cockburn South rail camps. The rail camp sewage will be added during periods of low sewage generation at Steensby in order to reduce excessive surge volumes building up in the tank.

The sludge generated will be dewatered using a mechanical dewatering device such as belt filter or filter press and then incinerated. Sludge cake will be stored in an animal proof secure area. Odour generation will be limited because the sludge will be aerobically digested, dewatered and incinerated regularly such that the sewage cake is not stored for significant periods. Odour control carbon vents will be installed where deemed necessary.

A.2.1.2 Mid-Rail and Ravn River Sites

Sewage waste generated at the Ravn River and Mid-Rail camps and Sewage generated at the Cockburn North and Cockburn South camps can only be transported and treated at either the Mine Site Sewage Treatment Facility or the Steensby Port Sewage Treatment Facility, unless otherwise approved by the Board in writing.

Sewage generated at these sites will mainly be conveyed to the Mary River permanent sewage treatment facility by truck. During the first year when there will only be access to the camp via an ice road, sewage can only be trucked from January to April. During the remaining months the sewage will be stored. There would be an opportunity to partially or fully treat sewage prior to storage. Sewage storage facilities may be aerated to prevent the waste from becoming septic (generating odours and noxious gases). Sludge will form and settle in the facility depending on how long the sewage resides there. This sludge will be withdrawn and delivered separately to the dewatering system at the Mine Site. Given the quantity of waste to be moved or stored every effort will be made to reduce this volume by using low flow showers and toilets and potentially segregating gray water to be treated and reused as urinal flush water. Other potential waste minimization techniques will also be reviewed. These will be evaluated during the detailed design. In addition, the surrounding water bodies will be modelled and sampled to potentially support having sewage treatment and waste discharge near the camp sites. An additional amendment to the Type A Water Licence would be required to support this option.

The equalization tank at Mary River will be sized to provide sufficient residence time for freshly added sewage from the Mid-Rail or Ravn River to mix with sewage generated at the Mine Site. Given that sewage generation follows diurnal patterns the sewage from the remote sites will be added during the low generation periods at the Mine Site.

A.2.1.3 Cockburn Tunnels (Cockburn North) and Cockburn South Sites

Sewage generated at these sites will be conveyed to the Steensby permanent sewage treatment facility by truck. Raw to partially treated sewage will be conveyed to Steensby Inlet by means of established roads along the rail alignment or by ice road. Depending on the volume of sewage to be stored at site, the

The information contained herein is proprietary Baffinland Iron Mines Corporation and is used solely for the purpose for which it is supplied.
It shall not be disclosed in whole or in part, to any other party, without the express permission in writing by Baffinland Iron Mines Corporation.

Note: This is an UNCONTROLLED COPY. All staff members are responsible to ensure the latest revision is used.

sewage storage facilities will be sized accordingly. At the north camp there will only be access to the camp via an ice road and as such sewage can only be trucked from January to April. During the remaining months the sewage will be stored. Sewage storage facilities will be aerated to prevent the waste from becoming septic (generating odours and noxious gases). There will be the opportunity to partially or fully treat sewage prior to storage. Sludge will form and settle in the facility depending on how long the sewage resides there. This sludge will be withdrawn and delivered separately to the dewatering system at the Steensby site. Given the quantity of waste to be moved every effort will be made to reduce this volume by using low flow showers and toilets and potentially segregating gray water to be treated and reused as urinal flush water. Other potential waste minimization techniques will also be reviewed. These will be evaluated during the detailed design. In addition, the surrounding water bodies will be modelled and sampled to potentially support having sewage treatment and waste discharge near the camp sites. An additional amendment to the Type A Water Licence would be required to support this option.

The equalization tank at Steensby will be sized to provide sufficient residence time for freshly added sewage from the Cockburn Tunnels (Cockburn North) and Cockburn South camps to mix with sewage generated at the Steensby site. Given that sewage generation follows diurnal patterns the sewage from the remote sites will be added during the low generation periods at the Steensby site.

A.2.1.4 Design Considerations from 'Lessons Learned'

Previous studies have recommended the use of Polishing Waste Stabilization Ponds (i.e. Mary River Project Appendix 10D-3 Wastewater Management Plan SD-EMMP-003, March 31, 2010) followed by a secondary waste polishing system. The existing infrastructure at the Mine Site and Milne Port include these ponds in part to allow for secondary treatment of the sewage treatment plant (STP) effluent which was not meeting the phosphorus discharge limit. However, based upon practical experience at the site with the STP it was projected that a secondary polishing system will not be required in the future.

The new systems will be installed with temporary storage ponds for off-spec water but will not require secondary polishing for the following reasons:

- The proposed new STPs will be based on membrane technology. This technology produces better quality effluent, is less susceptible to the impact of varying loads and has shorter start-up periods.
- The STP trains will be better able to handle upsets by using the available spare capacity to operate the equipment at more conservative flow rates.
- The existing equipment (at the Mine Site) was designed to meet a phosphorus discharge criterion of 0.5 mg/L. The new STPs shall be designed to meet a much lower phosphorus discharge criteria of <0.1 mg/L.

Sewage Treatment equipment vendors will be assessed based upon their experience producing equipment for arctic environments.

The information contained herein is proprietary Baffinland Iron Mines Corporation and is used solely for the purpose for which it is supplied.
It shall not be disclosed in whole or in part, to any other party, without the express permission in writing by Baffinland Iron Mines Corporation.

Note: This is an UNCONTROLLED COPY. All staff members are responsible to ensure the latest revision is used.

A.2.2 Oily Water/Wastewater Treatment Process Description

The process descriptions for both oily water/wastewater treatment systems for Steensby are described in the section that follows.

A.2.2.1 Steensby Site

Future Construction and Operation Phase

Oily water may be generated from the following sources (this neglects minor oily water generated from accidental spills which will be handled by the Spill Response Plan):

- Vehicle maintenance and wash facilities (i.e. truck wash, equipment and floor wash down water).
- Fuel tank farm run-off.
- Emulsion plant wash water.
- Freight dock.
- Airstrip.

The vehicle maintenance and wash facility will have a sump located in close proximity to the maintenance facilities. Wash water produced in the maintenance facility (truck washing, equipment and floor washdown) will flow by gravity and be collected in the local sump. Suspended material in the wastewater will settle in the sump. Free oil in the wastewater will be removed by an oil/water separator system in order to meet the required oil discharge limits. The waste will then be further treated in the oily water treatment plant by activated carbon and clay to meet other specific parameters. The effluent will then be pH adjusted, if required, to meet discharge criteria.

Treated effluent from the oily water treatment plant will be pumped to discharge, or recycled and reused as washdown water at the maintenance shops. The separated waste oil will be stored in a local tank. Periodically, the oil will be drained and shipped off site or incinerated. Accumulated suspended solids will be periodically removed and sent to the landfarm for treatment, if necessary.

Run-off from the tank fuel storage areas will have to be treated by the mobile oily water separator system that will be used as needed. The resulting water will be discharged directly to the receiving body (Steensby – Ocean). The water will be periodically tested such that if any parameter is out of compliance the water will be removed by vacuum truck and treated in the vehicle maintenance shop wastewater treatment plant.

Run-off water from the freight dock will be collected and treated in a manner similar to the treatment scheme for the run-off from the tank fuel storage areas.

The emulsion plant shall be supplied with its own wastewater treatment plant which utilizes an evaporation system to evaporate the water leaving solid residue and oil. This residue will be tested for

The information contained herein is proprietary Baffinland Iron Mines Corporation and is used solely for the purpose for which it is supplied.
It shall not be disclosed in whole or in part, to any other party, without the express permission in writing by Baffinland Iron Mines Corporation.

Note: This is an UNCONTROLLED COPY. All staff members are responsible to ensure the latest revision is used.

toxicity and if necessary taken off-site for disposal at a licensed facility otherwise the waste will be land filled.

Run-off water from the air strip run-off also has the potential for some oily water content. As such, this water will be collected through a drainage system and transported as needed by vacuum truck to the vehicle maintenance shop wastewater treatment plant.

Small amounts of propylene glycol will be used for de-icing of aircraft. The spent propylene glycol will be collected, stored in containers and sent by ship off-site to a licensed treatment/disposal facility. Some interim treatment of the spent propylene glycol may occur to reduce the overall waste volume generated. This will be evaluated during the detailed design.

Some dust suppression solution will be applied to roads at the Steensby site. The suppressant will be DL-10. This is an asphalt based emulsion and as such some water will be consumed for the dilution of the solution. This is an approved dust suppressant as specified by the Nunavut Department of Sustainable Development Environmental Protection Service (Environmental Guideline for Dust Suppression).

In addition, some Calcium Chloride solution will be used for drilling activities. The spent brine will be applied to nearby roads as a dust suppressant. This is an approved dust suppressant as specified by the Nunavut Environmental Protection Service. Treated oily water will be blended with treated sewage and discharged or discharged directly based on sampling.

A.2.2.2 Rail Camps

Two tunnels are to be built along the railway and a small amount of water will be consumed in the tunnelling operation. Calcium Chloride brine solution is used for tunnelling. This waste brine generated during the tunnelling will be collected and disposed of as per the Waste Management Plan for Construction, Operation and Closure. In addition, some Calcium Chloride solution will be used for drilling activities.

The information contained herein is proprietary Baffinland Iron Mines Corporation and is used solely for the purpose for which it is supplied.
It shall not be disclosed in whole or in part, to any other party, without the express permission in writing by Baffinland Iron Mines Corporation.

Note: This is an UNCONTROLLED COPY. All staff members are responsible to ensure the latest revision is used.

Appendix G - Polishing Waste Stabilization Ponds (PWSP) Effluent Discharge Plan

The information contained herein is proprietary Baffinland Iron Mines Corporation and is used solely for the purpose for which it is supplied.
It shall not be disclosed in whole or in part, to any other party, without the express permission in writing by Baffinland Iron Mines Corporation.

Note: This is an UNCONTROLLED COPY. All staff members are responsible to ensure the latest revision is used.

Wood Environment & Infrastructure Solutions,
a Division of Wood Canada Limited
900 Maple Grove Road, Unit 10
Cambridge, ON N3H 4R7
Canada
T: 519-650-7100

Technical Memo

To: Connor Devereaux, Baffinland Iron Mines

From: Jack Hinds, P.Eng, Wood E&IS

Reviewer: Jered Munro, P.Eng, Wood E&IS

Project No.: TPC192071

Date: 29 April 2020

Re: PWSP Treatment and Discharge

1.0 Background

Baffinland Iron Mines Corporation (Baffinland) has retained Wood Environment and Infrastructure Solutions, a Division of Wood Canada Ltd (Wood E&IS) to prepare this technical memo, outlining treatment, and disposal options for the water stored in the polishing/ waste stabilization ponds (PWSPs) at the Milne Inlet and Mary River sites.

The PWSPs can receive wastewater, sludge, grey water, and non-compliant sanitary effluent from various locations across both sites. These sources include, but are not limited to:

- Non-compliant effluent from wastewater treatment plants
- Excess sludge generated at wastewater treatment plants
- Raw sewage from spills
- Raw sewage from lift stations as a result of malfunction or emergency
- Greywater from lift stations

This plan updates and amends the previous plan that was completed in March 2012. The intent of this memorandum is to outline options that could be employed to treat the PWSPs to a level that is compliant with the approved Type A Water Licence requirements and be discharged to the environment under those requirements. The proposed treatment options may be used individually or combined with other treatment options to form a treatment system that is capable of achieving compliant effluent quality. This approach has been selected to provide operators with the ability to address various water quality issues that can occur due to changing conditions in the PWSPs, caused by the various site sources noted above, and the natural environment.

The PWSPs can potentially require treatment for:

- Removal of BOD/COD
- Removal of total suspended solids (TSS)
- Removal of total ammonia
- Removal of total phosphorus
- Removal of oil and grease
- Destruction of faecal coliforms
- Acute Toxicity associated with inorganic or organic compounds
- Control of pH

'Wood' is a trading name for John Wood Group PLC and its subsidiaries
Wood Environment & Infrastructure Solutions, a Division of Wood Canada Limited
Registered office: 2020 Winston Park Drive, Suite 700, Oakville, Ontario L6H 6X7
Registered in Canada No. 773289-9; GST: 899879050 RT0008; DUNS: 25-362-6642

Wood Environment & Infrastructure Solutions,
a Division of Wood Canada Limited
900 Maple Grove Road, Unit 10
Cambridge, ON N3H 4R7
Canada
T: 519-650-7100

1.1 Onsite Water/Wastewater Treatment Equipment

There are a number of water and wastewater treatment equipment available at the Project site that are available for use in treating the PWSPs. The equipment is owned and maintained by Baffinland, and is typically operated by Baffinland, or is operated under contract with an engineering or operations firm. It is expected that Baffinland may be required to purchase additional equipment or replace existing equipment that is aging or no longer functional.

Baffinland maintains a supply of common treatment chemicals required by the treatment processes. Less common chemicals used for treatment are brought on site on an as-needed basis.

2.0 Treatment of PWSPs

PWSP treatment occurs during the spring and summer discharge seasons, when the water in these ponds is not frozen. Water quality in the PWSPs can be variable, and often changes over the course of the year. These variations in water quality are typically caused by:

- Contributions of impacted water to the PWSPs
- Spring melt, and ice retained within the PWSPs
- Fluctuations in temperature and pH
- Biological activity and consumption of nutrients
- Diurnal effects, exacerbated by long periods of daylight/twilight during the mid-summer months

The treatment methods presented below represent the treatment techniques that may be employed to achieve compliant water quality in the PWSPs, and allow for discharge to the environment. The options presented have been listed discretely but may be combined as required in order to address the influent water quality. As the water quality is variable over the course of a single season, multiple treatment methods or approaches may be required in a single season in order to maintain compliant effluent quality.

2.1 Winter Discharge

During the winter season, the PWSPs will stratify and eventually freeze the entire water column down to the lined bottom of the pond. If no additional non-compliant effluent is added to the ponds, it is possible that melted ice could be compliant for discharge. This offers Baffinland an opportunity to perform a discharge during winter months, if additional storage space is required before the spring melt.

To do so, Baffinland would use in-line heaters to recirculate hot water into the pond, to produce a layer of melt water. The melt water would then be heated, and returned to the pond, to further melt the surface ice. This process would be repeated, until there was sufficient free water on the surface to allow for sampling and discharge.

Samples will be collected for all criteria and analyzed prior to discharge. The discharge will be monitored for compliance following the guidelines given in Section 3.0, and will be shut down once water quality degrades below internally set limits.

'Wood' is a trading name for John Wood Group PLC and its subsidiaries
Wood Environment & Infrastructure Solutions, a Division of Wood Canada Limited
Registered office: 2020 Winston Park Drive, Suite 700, Oakville, Ontario L6H 6X7
Registered in Canada No. 773289-9; GST: 899879050 RT0008; DUNS: 25-362-6642

2.2 Spring Discharge

As noted in Section 2.1 above, during the winter months the PWSPs will typically freeze down to the lined bottom of the ponds. During spring freshet, warmer temperatures and increased daylight hours cause the top layer of ice to thaw first, creating a pool of clear water on the surface of the PWSPs.

Typically, this initial melt water is compliant for discharge due to settling of solids at the end of the previous season. If the water quality analysis confirms the meltwater is compliant, it may be discharged to the receiving environment without further treatment.

The discharge will be monitored for compliance following the guidelines given in Section 3.0.

2.3 Membrane Bioreactor Treatment

Baffinland owns and operates Membrane Bioreactors (MBRs) for treatment of sewage at both the Mary River and Milne Inlet sites. If there is available capacity in these plants, impacted water from the PWSPs may be treated through the installed MBRs. This may be achieved either through the use of a vac-truck offloading to the equalization tank, or through installation of a temporary or permanent pumped line to the equalization tanks. Appropriate controls would be installed to ensure the total volume of pond water treated is controlled and recorded, and the equalization tank and MBR treatment system are adequately protected from damage.

An alternate approach that could be considered by Baffinland is to install a package treatment process specifically for the PWSPs. In this case, impacted water from the ponds will be pumped directly into the equalization tank, and treated through the system.

Generally, a package treatment system is comprised of the following processes:

- Equalization tank and pumps
- Coarse filtration system
- Aeration tank, with aeration grid and blowers
- Biological treatment process, including membranes or media, blowers, backwash system, cleaning system etc.
- Sludge pumps and sludge storage
- Sludge handling system, such as a sludge press
- Final effluent holding tank and pumps
- Disinfection system
- Chemical dosing systems

2.3.1 Filter Cake Disposal

Filtered sludge cake generated by the biological treatment process is either incinerated onsite, or backhauled south for disposal at an approved facility. All sludge cake will be handled in accordance with the applicable portions of Baffinland's Fresh Water Supply, Sewage, and Wastewater Management Plan.

2.4 Dissolved Air Flotation

Dissolved Air Flotation (DAF) is a treatment principle typically used to remove solid materials from wastewater, through the use of a recycle stream of air-saturated liquid. Baffinland may employ owned, constructed, or rental DAF units at either site for treatment of the PWSPs. DAF systems typically only remove solid material in the water, making them applicable for removal of BOD, TSS, and total phosphorus.

Wastewater is pumped into the system from the source, through a tube flocculator where coagulation and flocculation chemicals are added prior to entering the main treatment tank through a distribution header. A recycle pump draws a stream of partially-clarified liquid off the side of the tank and pressurizes it in an air saturation tank. At the same time, compressed air is injected into the air saturation tank, creating a recycle stream saturated with dissolved air. This recycle stream is then released back into the main tank, where the saturated air comes out of solution as very fine air bubbles. These bubbles act as nuclei for flocculated/coagulated solids, causing them to rise to the surface. A skimmer transfers floated solids from the

surface of the tank to a hopper, where it's pumped to a tote or tank for storage and disposal. Clarified effluent flows over a weir and out of the system.

Generally, a DAF system is comprised of the following processes:

- Influent pump
- Tube flocculator
- Dissolved air floatation tank, with distribution headers
- Compressor
- Air control panel
- Air saturation tank
- Recycle pump
- Float skimmer and hopper
- Float pump
- Effluent weir
- Solids drain
- Effluent break tank or holding tank, and pumps
- Chemical dosing system

For coagulation, a DAF system may use the following chemicals:

- Aluminum sulfate (alum)
- Poly-aluminum chloride (PAC)
- Sodium aluminate
- Alum potash
- Ferric/ferrous sulfate
- Ferric chloride
- Lime/soda ash
- Caustic soda

For flocculation, a DAF system may use the following chemicals:

- Vendor-specific, proprietary anionic or cationic polymers

2.4.1 Separated Solids Handling

Solids removed from the water by the flotation system are pumped into totes or other appropriate containers, labelled and manifested appropriately, and backhauled seasonally for disposal.

If possible, the floated solids may also be pressed through a filter press and incinerated, if the composition and water content allow.

2.5 Bulk Pond Treatment

If required, removal of TSS, BOD, total phosphorus, total ammonia, and/or faecal coliforms, may be performed in the ponds themselves. Doing so allows for rapid, bulk treatment of the contents of the PWSPs.

A typical treatment system would require:

- A pond mixing system
- Chemical dosing systems
- Inline mixers, such as a mixing tank, tube flocculator, or static mixer
- Flowmeter for flow measurement and totalization

Jar testing would be completed on the raw contents of the PWSP being treated to determine approximate chemical dosing rates required for treatment. The ponds would be mixed and chemicals would be injected into the mixing streams in accordance with dosing rates established during the jar tests. Chemical addition may be completed in multiple steps, to ensure no chemical is dosed beyond what is required for treatment.

Once dosing is complete, the PWSP will continue to be mixed for an appropriate amount of time, to ensure the chemical(s) reacts fully and all contents of the pond have been turned over. Once mixing is complete, the mixing system will be shut off, to allow any coagulated/flocculated solids to settle, or to allow for natural stripping

processes to occur. An effluent discharge system will be set up to allow for recirculation of effluent back into the PWSP. When water quality analyses confirm the clarified water is compliant for discharge, discharge may begin.

For in-pond treatment, the following chemicals may be used:

- Aluminum sulfate (alum)
- Poly-aluminum chloride (PAC)
- Sodium aluminate
- Alum potash
- Ferric/ferrous sulfate
- Ferric chloride
- Lime/soda ash
- Caustic soda
- Vendor-specific, proprietary anionic or cationic polymers
- Sulfuric acid
- Citric acid
- Hydrochloric acid
- Phosphoric acid
- Nitric acid
- Sodium hydroxide
- Sodium bicarbonate
- Magnesium hydroxide

2.5.1 Settled Solids Handling

Solids removed as part of this treatment method will naturally settle to the bottom of the ponds. Based on observations made in previous years, the quantities of settled solids are low enough to be considered insignificant in comparison to the total storage volume of the pond. Any settled solids typically remain settled and degrade naturally over time. If necessary, Baffinland may elect to drain any one of the ponds and remove and dewater any sludge remaining in the bottom.

2.6 pH Adjustment

pH adjustment may be required as a standalone treatment or may be required as part of a larger treatment system in order to maintain compliance. pH adjustment can be carried out in-pond or adjusted inline prior to discharge, depending on the requirements of the system and the condition of the PWSPs.

A typical pH adjustment system could require:

- A pond mixing system
- Chemical dosing systems
- Temporary chemical storage
- Inline mixers, such as a mixing tank, tube flocculator, or static mixer

Past observations suggest that pH in the PWSPs can be acidic, neutral, or basic, depending on what has been contributed to the pond, and what kind of natural biological activity has occurred. Various other treatment methods listed here may also have an impact on effluent pH and may require that pH adjustment be added as part of the treatment process to ensure compliant effluent.

The following chemicals may be used to form part of a pH adjustment system:

- Aluminum sulfate (alum)
- Poly-aluminum chloride (PAC)
- Sodium aluminate
- Alum potash
- Ferric/ferrous sulfate
- Ferric chloride
- Lime/soda ash
- Caustic soda
- Sulfuric acid
- Citric acid

- Hydrochloric acid
- Phosphoric acid
- Nitric acid
- Sodium hydroxide
- Sodium bicarbonate
- Magnesium hydroxide

2.7 Filtration

Filtration systems provide a physical barrier, allowing for the removal of solid matter from a liquid stream. Doing so may be an effective means of reducing/removing TSS, BOD, and total phosphorus. Filtration may be used as a standalone treatment process or as part of a larger treatment system. Solids removal through filtration can also be used as tertiary treatment when combined with other treatment processes, to protect against carry-over or suspended solids.

A typical solids filtration system may employ one or more of the following technologies:

- Basket strainers
- Bag filters
- Disposable cartridge filters
- Backwashing cartridge filters
- Sand filters
- Continuous backwash sand filters
- Multimedia filters
- Rotary drum screens
- Belt filters
- Microfiltration
- Ultrafiltration
- Nanofiltration
- Membrane filtration

Filters used either alone, or in conjunction with other treatment processes, may be stand-alone, skid mounted, packaged, or contained within their own seacan.

2.7.1 Filtered Solids Handling

For most cartridge or bag filtration systems, solids are removed through capture on a fiber media, which cannot be backwashed. The media must be removed and disposed of according to Baffinland's Waste Management Plan.

Effluent from the backwashing of filters may be directed back into the PWSPs, or into dedicated storage for further treatment or disposal.

2.8 Adsorption Media Treatment

For treatment of dissolved compounds in impounded waters, various forms of adsorption media can be employed. The media would be loaded into plastic or steel media vessels and connected to the remainder of a constructed system using hoses. Various types of media may be used in series to remove different contaminants of concern. Media that may be used include:

- Granular activated carbon (GAC)
- Synthetic ion exchange resins
- Activated iron products
- Natural Zeolites
- Other adsorptive and ion exchange media as applicable

Use of adsorption media is typically sensitive to solids in the water, and may become fouled if solids concentrations are too high. Typically adsorption vessels would be preceded by a suitably selected filtration process to prevent fouling.

2.9 Oxidation

Some of the chemical treatment approaches listed use an oxidation-reduction reaction to remove contaminants. However, it is sometimes necessary to augment that oxidation reaction to further remove any contaminants, or to remove specific species that are otherwise hard to treat. Most forms of enhanced oxidation require additional

power and would be purpose-built systems constructed or purchased from vendors and brought to site. These could include:

- Hydrogen peroxide addition
- Ozone addition
- Ultraviolet light (UV)
- Electrochemical oxidation

2.10 Transfer of Water Between Sites

Under some circumstances, it may be necessary to transfer non-compliant effluent or pond water between sites, to facilitate treatment or provide additional capacity to handle upset conditions. Both sites have separate PWSPs, with different capacities and different available methods of treatment. By transferring water from one site to another, Baffinland can more effectively manage and treat non-compliant effluent, during treatment plant upsets.

Treatment between sites is achieved through the use of vacuum trucks specifically designated for hauling non-compliant effluent. The trucks would transport the water between the PWSPs at both sites, as required to achieve treatment and discharge.

3.0 Sampling and Performance Monitoring

The effluent discharge quality criteria for the PWSPs is defined in the Type A Water Licence 2AM-MRY1325 Amendment No. 1 as issued by the Nunavut Water Board, July 31, 2014. The following table summarizes the discharge criteria:

Parameter	Discharge to Freshwater Max concentration of any grab sample (mg/L)	Discharge to Ocean Max concentration of any grab sample (mg/L
BOD_5	30	100
TSS	35	120
Faecal Coliforms	1000 CFU/100 ml	10,000 CFU/100 ml
Oil and Grease	No visible sheen	No visible sheen
pH	>6.0, <9.5	>6.0, <9.5
Ammonia (NH3-N)	4.0	NR
Total Phosphorus	1.0	NR
Toxicity[1]	Not acutely toxic	Not acutely toxic

1: Acute lethality to rainbow trout (Method EPS/1/RM/13) and daphnia magna (Method EPS/1/RM/14)

Prior to commencing any treatment or discharge, Baffinland or their contractors will be required to develop and submit a discharge plan including details on monitoring and sampling frequency, safeguards, internal limits, etc. This plan shall be submitted to the Environmental Superintendent for review and approval before any treatment or discharge begins.

Baffinland will complete sampling to confirm treatment efficacy prior to and during discharge, which will be conducted at the intervals specified in the relevant discharge plan and the results of which will be used to guide treatment implementation and the ability to commence or continue discharge to the receiving environment. Discharge samples will be collected in accordance with the schedule laid out in the Type A Water Licence and provided to regulators to confirm treated effluent discharge meets the applicable criteria outlined above.

If there are any questions, comments, or concerns regarding the content of this memo, please feel free to reach out to Jack Hinds at 519-650-7143 or Jered Munro at 519-650-7130.

Wood Environment & Infrastructure Solutions
a Division of Wood Canada Limited

Jack Hinds, P.Eng
Process Engineer
Tel: 519-650-7143
Email: jack.hinds@woodplc.com

Jered Munro, P.Eng
Senior Engineer
Tel: 519-650-7130
Email: jered.munro@woodplc.com

Appendix H - Mobile Oily Water Separator (OWS) Manual

(See BAF-PH1-830-T07-0001)

The information contained herein is proprietary Baffinland Iron Mines Corporation and is used solely for the purpose for which it is supplied.
It shall not be disclosed in whole or in part, to any other party, without the express permission in writing by Baffinland Iron Mines Corporation.

Note: This is an UNCONTROLLED COPY. All staff members are responsible to ensure the latest revision is used.

Appendix I – Oily Water Treatment Plant (For Vehicle Wash Water) O & M Manuals

(Available upon request)

The information contained herein is proprietary Baffinland Iron Mines Corporation and is used solely for the purpose for which it is supplied.
It shall not be disclosed in whole or in part, to any other party, without the express permission in writing by Baffinland Iron Mines Corporation.

Note: This is an UNCONTROLLED COPY. All staff members are responsible to ensure the latest revision is used.

Appendix J – BAF-PHl-340-PRO-048 – Waste Pond Water Treatment Plant Operations

The information contained herein is proprietary Baffinland Iron Mines Corporation and is used solely for the purpose for which it is supplied.
It shall not be disclosed in whole or in part, to any other party, without the express permission in writing by Baffinland Iron Mines Corporation.

Note: This is an UNCONTROLLED COPY. All staff members are responsible to ensure the latest revision is used.

Baffinland Iron Mines Corporation

Waste Pond Water Treatment Plant Operations

Rev 1.0

Prepared By: Chet Fong
Department: Mine Operations
Title: Senior Mining Engineer
Date: 17/08/2018
Signature:

Approved By: Simon Fleury
Department: Mine Operations
Title: Mine Manager
Date: 17/08/2018
Signature: Simon L. Fleury

The information contained herein is proprietary to Baffinland Iron Mines Corporation and is used solely for the purpose for which it is supplied.
It shall not be disclosed in whole or in part, to any other party, without the express permission in writing by Baffinland Iron Mines Corporation.

Note: This is an UNCONTROLLED COPY. All staff members are responsible to ensure the latest revision is used.

DOCUMENT REVISION RECORD

Issue Date MM/DD/YY	Revision	Prepared By	Approved By	Issue Purpose
08/17/18	V1.0	CF		Initial

The information contained herein is proprietary to Baffinland Iron Mines Corporation and is used solely for the purpose for which it is supplied.
It shall not be disclosed in whole or in part, to any other party, without the express permission in writing by Baffinland Iron Mines Corporation.

Note: This is an UNCONTROLLED COPY. All staff members are responsible to ensure the latest revision is used.

TABLE OF CONTENTS

1 PURPOSE 4

2 SCOPE 4

2.1 EXEMPTIONS 4

3 RESPONSIBILITES 4

4 Procedures 4

4.1 plant operations 5

4.2 Plant Start up 6

4.3 Plant Shut Down 6

4.4 Discharging 6

4.5 Chemical dosing 7

4.5.1 Ferric sulphate – liquid 7

4.5.2 Lime – bags 8

4.5.3 Polymer – bags 8

4.6 System Automation 8

4.7 Trouble Shooting 8

4.8 Accident response 8

4.8.1 response equipment available 8

4.8.2 Spills on the ground 9

4.8.3 Spills on person 9

4.8.4 Lime in eyes 9

4.8.5 Lime spill 9

4.8.6 Tank leak ..... **Error! Bookmark not defined.**

4.8.7 Hose leak ..... **Error! Bookmark not defined.**

4.9 APPENDICIES 9

The information contained herein is proprietary to Baffinland Iron Mines Corporation and is used solely for the purpose for which it is supplied.
It shall not be disclosed in whole or in part, to any other party, without the express permission in writing by Baffinland Iron Mines Corporation.

Note: This is an UNCONTROLLED COPY. All staff members are responsible to ensure the latest revision is used.

1 PURPOSE

This document outlines the basic procedure to safely operate the Water Treatment Plant

2 SCOPE

This document will cover the basic operations of the plant, including start up and shut down, monitoring, treatment, and emergency protocols and procedures for at risk activities at the Water Treatment Plant.

2.1 EXEMPTIONS

This document does not include instructions related to water treatment, which can be found in the plant Operations and Maintenance Manual.

3 RESPONSIBILITES

Any visitor shall request permission to the plant operator prior to entering the work area. In the absence of an operator, permission shall be requested to the mine supervisor.

The Plant operator shall ensure that everyone working in the plant wears the requisite PPE according to the activities being performed (e.g. chemical handling).

4 PROCEDURES

The information in this section is intended as a summary of plant operations. In the case of a discrepancy between this document and the Operations and Maintenance Manual, the latter will take precedence.

For full details on design and plant operation, refer to the operator's manual. In standard operations, the WTP is intended to draw water from the Waste Dump Pond and treat the intake water in 3 steps inside the WTP structure. The water is then discharged to a Geotube Settling Pond, where a fourth treatment step of settlement will occur, before water is either discharged into the environment or, if not compliant, recirculated back to the Waste Dump Pond.

The three steps of treatment involve the injection of chemical into temporary storage tanks.

- Step 1 – Iron Precipitation
- Step 2 – Hydroxide Precipitation and pH Adjustment

The information contained herein is proprietary to Baffinland Iron Mines Corporation and is used solely for the purpose for which it is supplied.
It shall not be disclosed in whole or in part, to any other party, without the express permission in writing by Baffinland Iron Mines Corporation.

Note: This is an UNCONTROLLED COPY. All staff members are responsible to ensure the latest revision is used.

- Step 3 – Flocculation
- Step 4 - Filtration

Steps 1-3 occur inside the WTP structure, with the 4th step taking place in the Geotube Settling Pond.

4.1 PLANT OPERATIONS

Plant operations consists primarily of managing flow, dosage and water levels across the pond, sump, and tanks. Flow is managed with a combination of control panel adjustments and manual valve manipulations.

The plant consists of the following components:

1. Intake Pump – pulls water from the Waste Dump Pond into the WTP
2. Onion tanks – water is stored for treatment prior to discharge. There are two trains, which can be run independently or concurrently.
3. Control panel – use to remotely manage pumps – can be set for automatic and manual operations
4. Dosing pumps – use to inject chemical into onion tanks at a fixed rate
5. Dosing tanks – mixing tanks from which chemicals (Lime, Polymer) is depleted at a configurable rate
6. Transfer pumps – used to take treated water from the plant out to the Geotube Pond
7. Geotube Pond – discharge from the plant is deposited here for particulate settlement prior to final discharge.
8. Discharge pump – used to pull treated water from the Geotube Pond to either be discharged into the environment or recirculated back to the Waste Dump Pond.
9. Blower motors – used to agitate water in onion tanks during treatment to ensure more even dispersion of chemicals.

Once the Plant is operational, the operator will commence with monitoring the measured levels of pH and suspended solids with built in instrumentations and gauges. These readings may be corroborated with manual instrumentations such as a YSI meter.

When readings indicate pH readings at the desired values, the operator shall then initiate discharging of water into the Geotube Pond. This water is allowed to percolate through the Geotube, which catches particulates as a filter. Once in the Sump, where any remaining particulates are then captured and settle into the bottom of the pond.

Water is discharged from this Geotube Pond, either directly into the environment or back into the Waste Dump Pond. The maximum flow rate for these discharging is 1200 gal/min, this limit imposed by the flowmeter installed.

At design capacity, the intake pump(s) should be able to pull water into the WTP for treatment at an equal rate to the discharge pump. The plant effectively runs continuously with dosing in-stream.

The information contained herein is proprietary to Baffinland Iron Mines Corporation and is used solely for the purpose for which it is supplied.
It shall not be disclosed in whole or in part, to any other party, without the express permission in writing by Baffinland Iron Mines Corporation.

Note: This is an UNCONTROLLED COPY. All staff members are responsible to ensure the latest revision is used.

4.2 Plant Start up

The following steps should be undertaken when starting up the WTP.

1. Ensure blower motors are activated.
2. Ensure all the Valves to the Geotube Sump are open.
3. Ensure the transfer pumps are switched to automatic
4. Check that all the intake valves are open
5. Keep valves open between tanks on each train
6. Start up intake pump and adjust pressure accordingly. To do this, adjust the following:
    a. Rpm of the pump
    b. Valve openings
7. Start Ferric Sulphate Dosing system. Ensure intake is in the Ferric Sulphate barrels, and there are no leaks present. Pumps should be activated.
8. Start Lime Dosing system. Dosing pumps should be activated.
9. Start up Polymer Dosing System. Dosing pumps should be activated

Plant operations can now commence.

4.3 Plant Shut Down

Plant shut down can be undertaken when it is to be unmanned for a longer period of time (eg. More than 2 shifts) within the same system (for winter decommissioning, procedure XXX). To run a plant shut down

1. Shut all intake valves
2. Shut all Ferric Sulphate dosing equipment
3. Shut all Lime dosing equipment
4. shut all Polymer dosing equipment
5. Rinse Lime lines (reference other procedure)

Plant can now be shut down. This procedure can be utilized with the onion tanks full. This should also be done before any interruptions in power due to generator maintenance or other causes.

4.4 Discharging

Discharging be undertaken whenever the plant is running. It is most efficient to run the discharge when there is moderate to high water levels in the Geotube Sump. The intake hose for the Geotube Sump should utilize the ring to ensure that drawn water is from the top of the water surface.

Discharging requires the manual operation of the valves to discharge the water either to the environment or back to the Waste Dump Pond. Readings should also be checked and logged on the flowmeter when discharge begins using the totalizer values.

The information contained herein is proprietary to Baffinland Iron Mines Corporation and is used solely for the purpose for which it is supplied.
It shall not be disclosed in whole or in part, to any other party, without the express permission in writing by Baffinland Iron Mines Corporation.

Note: This is an UNCONTROLLED COPY. All staff members are responsible to ensure the latest revision is used.

NOTE: discharge flow rate should be kept below 1200 gal/min, as flow greater than this will not be measureable.

To discharge, the following steps should be undertaken:

1. Ensure enough water to discharge. Water levels should be at least 50 centimetres from the bottom of the sump prior to beginning discharge.
2. Ensure valve on re-circulation line is closed. This will enable the water to discharge into the environment. Where re-circulation is required, close the valve on the discharge line and open the valve on the re-circulation line.
3. If discharging to the environment, check the totalizer reading on the flowmeter prior to discharge. This is not required if re-circulating.
4. On the control panel, Set discharge to "on"
5. While discharging, check discharge pH and Turbidity with sampling tap periodically. Samples can be collected and tested using YSI instrument.
6. When discharging is complete or to be disabled, go to control panel and set discharge to "off"

4.5 CHEMICAL DOSING

Chemical dosing is performed as part of the treatment process. The primary drivers for chemical dosing is:

1. Reduce the pH
2. Reduce the suspended solids

Prior to discharging water back into the environment.

As dosing quantities will vary depending on flow rate and water qualities, refer to user manual for dosing quantities.

Dosing procedures will vary slightly between the stages of treatment. The three stages that require chemical intervention are Ferric Sulphate, Lime, and Polymer.

4.5.1 FERRIC SULPHATE – LIQUID

PPE Required: long chemical resistant gloves, apron, face shield, standard PPE

- Prepare a barrel for dosing by placing the barrel into the duck pond by the ferric sulphate dosing area and removing the top seal.
- Put 2 dosing pumps into 1 barrel (1 per train)
- Switch on dosing pump on the control panel
- On the pump, check frequency and stroke length to ensure dosage is as expected.
- To change barrels, switch off on the dosing pump and change barrel

The information contained herein is proprietary to Baffinland Iron Mines Corporation and is used solely for the purpose for which it is supplied.
It shall not be disclosed in whole or in part, to any other party, without the express permission in writing by Baffinland Iron Mines Corporation.

Note: This is an UNCONTROLLED COPY. All staff members are responsible to ensure the latest revision is used.

4.5.2 LIME – BAGS

PPE Required: long chemical resistant gloves, respirator, face shield, respirator, standard PPE

- Fill mixing tank with intake water.
- Check filter on accessory intake water line (dedicated line for filling lime and polymer mixing tanks)
- Open valve on AI water line (fill tank). Fill to required water levels
- Ensure mixer is operating
- Add lime to water

4.5.3 POLYMER – BAGS

PPE Required: standard PPE

- Fill mixing tank with intake water.
- Check filter on accessory intake water line (dedicated line for filling lime and polymer mixing tanks)
- Open valve on AI water line (fill tank). Fill to required water levels
- Ensure mixer is operating
- Add polymer to water

4.6 SYSTEM AUTOMATION

For instruction on System Automation, please refer to the Operations and Maintenance Manual.

4.7 TROUBLE SHOOTING

For issue identification, please refer to the checklists in the Operations and Maintenance Manual.

4.8 ACCIDENT RESPONSE

As the WTP involves the handling of a number of chemicals that may be harmful, precautions must be taken to ensure all personnel who are in the work area are informed of the hazards and the preventative and treatment measures.

4.8.1 RESPONSE EQUIPMENT AVAILABLE

The WTP is equipped with a stationary emergency shower, 2 portable emergency shower stations and eyewash stations (dual purpose), 2 fire extinguishers, and 1 stationary eyewash station.

Additionally, the WTP is equipped with spare PPE, face shields, respirators, chemical resistant gloves, hearing protection, and spill kits.

The information contained herein is proprietary to Baffinland Iron Mines Corporation and is used solely for the purpose for which it is supplied.
It shall not be disclosed in whole or in part, to any other party, without the express permission in writing by Baffinland Iron Mines Corporation.

Note: This is an UNCONTROLLED COPY. All staff members are responsible to ensure the latest revision is used.

There are also patch kits for the onion tanks, hose and fitting replacements, tools, and a base station radio available at the WTP.

In the event that an incident occurs that requires emergency response, same basic steps should be immediately undertaken. The following lists some of the possible situations and a brief of the response steps.

4.8.2 Spills on the ground

- Retrieve spill pad kit
- use gloves to handle
- dispose in drum
- Label and dispose.

4.8.3 Spills on person

- Proceed to stationary emergency shower
- Notify secondary operator
- Secondary operator activates pump switch
- Pull handle and rinse for 10 mins
- If unable to proceed to stationary emergency shower, refer to “emergency response procedure”

4.8.4 Lime in eyes

- If possible, proceed immediately to emergency eyewash station
- Activate emergency eyewash and rinse for 10 mins.
- Repeat if required
- Notify secondary operator
- If unable to proceed to emergency eyewash station, refer to “emergency response procedure”

4.8.5 Lime spill

- Retrieve spill pad kit
- use gloves to handle
- dispose in drum
- Label and dispose.

4.9 APPENDICIES

Appendix A – Operations and Maintenance Manual for Mary River Mine Waste Rock Pile Water Treatment Plant

The information contained herein is proprietary to Baffinland Iron Mines Corporation and is used solely for the purpose for which it is supplied.
It shall not be disclosed in whole or in part, to any other party, without the express permission in writing by Baffinland Iron Mines Corporation.

Note: This is an UNCONTROLLED COPY. All staff members are responsible to ensure the latest revision is used.

APPENDIX A – OPERATIONS & MAINTENANCE MANUAL FOR MARY RIVER MINE WASTE ROCK PILE WATER TREATMENT PLANT
20180817_v02

The information contained herein is proprietary to Baffinland Iron Mines Corporation and is used solely for the purpose for which it is supplied.
It shall not be disclosed in whole or in part, to any other party, without the express permission in writing by Baffinland Iron Mines Corporation.

Note: This is an UNCONTROLLED COPY. All staff members are responsible to ensure the latest revision is used.

OPERATIONS & MAINTENANCE MANUAL FOR MARY RIVER MINE WASTE ROCK PILE WATER TREATMENT PLANT 20180817_v02

Baffinland Iron Mines Corporation

Prepared by:

McCue Engineering Contractors
203-8291 92 Street
Delta, BC
V4G 0A4

Project No. 137-0001

This report is confidential and remains the property of McCue Environmental Contracting Inc. Distribution of this report, whole or in part, is not permitted without written permission from the author.

TABLE OF CONTENTS

Page

TABLE OF CONTENTS i

1.0 INTRODUCTION 1

2.0 PLANT OVERVIEW 1
- 2.1 General Process Description 1
- 2.2 Brief Process Overview 1
  - 2.2.1 System Inlet 1
  - 2.2.2 Step 1 – Iron Precipitation 2
  - 2.2.3 Step 2 – Hydroxide Precipitation and pH Adjustment 2
  - 2.2.4 Step 3 – Flocculation 2
  - 2.2.5 Step 4 – Filtration 3
- 2.3 Major Equipment List 3
- 2.4 System Automation 5

3.0 GENERAL STARTUP PROCEDURE 9
- 3.1 After Dormancy Pre-start-up Procedures 9
- 3.2 Commissioning 10
  - 3.2.1 Hydrated Lime Pump / Polymer Pump 10
  - 3.2.2 Blowers 10
  - 3.2.3 Ferric Pump 11
  - 3.2.4 Motorized Valve 11
  - 3.2.5 Diesel Pumps 11
  - 3.2.6 pH Sensors 12
  - 3.2.7 Geotube 12

4.0 OPERATION 12
- 4.1 General Operating Instructions 12
- 4.2 Operating Procedure 13
  - 4.2.1 Standard Operation 13
- 4.3 Daily Operator Checklist 15

APPENDIX A –DRAWINGS 17

APPENDIX B - MONITORING 24

1.0 INTRODUCTION

This documents outlines the Operations Manual for Baffinland Iron Mine Corporation's (BIM) Mary River Mine Waste Rock Pile water treatment plant (WTP).

2.0 PLANT OVERVIEW

2.1 General Process Description

The WTP employs a process of coagulation, pH adjustment, flocculation, and filtration to treat acid rock surface runoff collected in the pond at the base of the waste rock pile. The objective of the system operation is to treat water to within the parameters outlined in the Metal Mining Effluent Regulations (MMER), as specified to McCue by BIM, and summarized in Table 1.

Table 1: MMER Effluent Limits

Parameter	Unit	Maximum Authorized Monthly Mean Concentration	Maximum Authorized Concentrations in a Composite Sample	Maximum Authorized Concentration in a Grab Sample
Arsenic	mg/L	0.5	0.75	1.00
Copper	mg/L	0.3	0.45	0.60
Cyanide	NTU	1.00	1.50	2.00
Lead	mg/L	0.20	0.30	0.40
Nickel	mg/L	0.50	0.75	1.00
Zinc	mg/L	0.50	0.75	1.00
Total Suspended Solids	mg/L	15.00	22.50	30.00
Radium 226	Bq/L	0.37	0.74	1.11
pH	SU	6-9.5	6-9.5	6-9.5

The treatment steps are described in Section 2.2. Refer to drawings in Appendix A:

2.2 Brief Process Overview

2.2.1 *System Inlet*

Water is collected at an inlet storage pond (P-001) where it is held for treatment. Two diesel powered centrifugal trash pumps (PU-100A/B) are used to transfer water from the storage pond to an equipment enclosure where the WTP is housed.

At the WTP, the flow can be divided into two separate treatment trains (1 and 2), with each train having a flow meter on the inlet line to monitor flow.

Water is directed into two reactor tanks (TA-110 and TA-210) for processing.

2.2.2 *Step 1 – Iron Precipitation*

Ferric sulphate solution is injected into TA-110 and TA-210 to promote coagulation and precipitation of some heavy metals.

As of system commissioning in June 2018, ferric sulphate liquid solution (12% Fe) is used and injected directly into the process. Each process train utilizes an independent chemical pump to introduce chemical into the system.

The WTS also includes a ferric sulphate make down system, including a holding tank and mixer to allow for makeup of solution using dry ferric sulphate.

Each reactor tank includes a pH sensor to provide continuous monitoring of pH.

Each reactor tank is equipped with four air diffusers which supply air to the process and provide continuous mixing so that solids are kept suspended. Each train is supplied air by a dedicated blower.

2.2.3 *Step 2 – Hydroxide Precipitation and pH Adjustment*

Water flows by gravity from TA-110 and TA-210 to TA-120 and TA-220 respectively. Here, hydrated lime is injected into the process to increase pH and aid in further precipitation of some metals through hydroxide precipitation.

Hydrated lime solution is made manually by adding dry hydrated lime and raw influent water to a mixing tank (TA-020). A mixer is run continuously to ensure the hydrated lime slurry does not solidify.

One hydrated lime chemical pump is utilized to dose each reactor tank with chemical. Two motorized valves (MV-120 and MV-220) are used to control the flow of lime to each reactor tank. Each reactor tank includes a pH sensor to provide continuous monitoring of pH.

Each reactor tank is equipped with four air diffusers which supply air to the process and provide continuous mixing so that solids are kept suspended. Each train is supplied air by a dedicated blower.

2.2.4 *Step 3 – Flocculation*

Water flows by gravity from TA-120 and TA-220 to TA-130 and TA-230 respectively. Here, polymer is injected into the process to aid in flocculation of suspended solids prior to filtration.
Polymer solution is made manually by adding dry polymer and raw influent water to a mixing tank (TA-030). A mixer is run continuously to ensure uniformity of the polymer solution.

Two polymer chemical pumps are utilized to provide polymer dosing to each train. Polymer can be dosed directly into each reactor tank, or inline through a static mixer located directly downstream of the reactor tank.

2.2.5 *Step 4 – Filtration*

Water from TA-130 and TA-230 is pumped to a geotube pond via two diesel powered centrifugal trash pumps (PU-200A/B).

Water is directed to a manifold where it can be distributed to two geotube bags for solids filtration. Two additional geotube bags can be deployed in the pond once the currently operating geotube bags have reached capacity. These spare geotubes are currently stored in a warehouse for future use.

Filtered water leaves the geotube bags and is directed to a collection point at the North West corner of the pond. From here, water is pumped via one diesel trash pump (PU-300) to the Mary River discharge point, or recycled back to the inlet pond. A flow meter is installed on the discharge line to Mary River to allow for data logging of flow.

2.3 Major Equipment List

The WTP layout is provided in appendix A. A list of major equipment is provided in Table 2.

Table 2: Major WTP Equipment

Equipment	Description	Qty	Drawing Reference (If Available)
Pond Transfer Pump	Model: Prime Aire PA4A60-404ST Power: Diesel Driven Capacity: 140m3/hr	2	PU-100 A / PU-100 B
Inlet Flow Meter	Model: GF Signet 3-2551-P1-42	2	FT-100 / FT-200
Ferric Reaction Tank	Material: Polyurethane Size: 5.9m W x 1.5 H Capacity: 24,820 Liters	2	TA-110 / TA-210
Lime Reaction Tank	Material: Polyurethane Size: 5.9m W x 1.5 H Capacity: 24,820 Liters	2	TA-120 / TA-220
Polymer Reaction Tank	Material: Polyurethane Size: 5.9m W x 1.5 H Capacity: 24,820 Liters	2	TA-130 / TA-230
Aeration Blowers	Gast R7100A-3 Blower • 208 V / 3 HP / 60 Hz	2	BL-100A / BL-100B
pH Controller and Sensors	Model: Walchem W900 (Controller) Model: Walchem WEL-PHF-NN (Sensors)	1	pH-110/120/210/220
Motorized Ball Valve	Hayward 1” Ball Valve Model: HRSN2	2	MV-120 and MV-220
Level Transmitter	Model: Echosonic 11 LU27	2	LT-130 / LT-230
Bag Filter	Model: FTI830-2P-150-CS-BS-P13-DP Bag Size: 5 Micron	1	FIL-100
Ferric Chemical Pump	Model: Walchem EHE31E1-VC Power: 115 VAC/1hp/60Hz Capacity: 1 LPM @ 105m TDH	2	PU-010A / PU-010B
Lime Chemical Pump	Model: Flowmotion FR25-HR30HR Power: 230V/3hp/60Hz Capacity: 9.5 LPM @ 105 m TDH	1	PU-020
Polymer Chemical Pump	Model: Flowmotion FR25-HR30HR Power: 230V/3hp/60Hz Capacity: 16.5 LPM @ 105 m TDH	2	PU-030A / PU-030B
Ferric Mixing Tank	Material: Polyurethane Size: Ø 1.2m x 1.3m Height	1	TA-010
Lime Mixing Tank	Material: Polyurethane Size: Ø 1.8m x 1.7m Height	1	TA-020
Polymer Mixing Tank	Material: Polyurethane Size: Ø 1.6m x 1.6m Height	1	TA-030
Coarse Bubble Diffusers	Model: Maxair 24” SS	24	-

2.4 System Automation

The system is automated through a main control panel located in the system enclosure. The system P&ID is provided in Appendix A. Operation is outlined in Table 3.

Table 3: Control Panel Automation

Equipment ID	Equipment Description	Control Logic	PID Control Reference	Controls	Panel Indication
PU – 100 A/B	Inlet Pond Pump	Units can be controlled in Hand or in Auto. Pump will turn on in Hand in Auto or in Hand.	-	-	Pump icon will indicate run status
		Pump will turn off if high level is measured in TA-110 or TA-210	LSH-110 / LSH-210	Auto	High level alarm at panel
		Pump will turn off if high level measured in TA-130 or TA-230	LIT-130 / LIT-230	Auto - High level settable at panel	High level alarm at panel
BL-100 A/B	Blower	Units can be controlled in Hand or in Auto Blower will turn on in Auto or in Hand	-	-	Blower icon will indicate run status
		BL-100 A will turn off if low level is measured by LIT-130	LIT-130	Auto – Low level settable at panel	Low level alarm
		BL-100 B will turn off if low level is measured by LIT-230	LIT-230	Auto – Low level settable at panel	Low level alarm
pH-110	pH Sensor	Continuous monitoring of pH	-	-	Display pH on PLC
pH-210	pH Sensor	Continuous monitoring of pH	-	-	Display pH on PLC

pH-210	pH Sensor	If pH>9.5, close MV-120 - Alarm	MV-120	Auto – pH set point settable at panel	Display pH on PLC
pH-220	pH Dosage	If pH>9, close MV-220 - Alarm	MV-220	Auto – pH set point settable at panel	Display pH on PLC
PU-010A	Ferric Pump	Units can be controlled in Hand or in Auto	-	-	Pump icon will indicate run status
		If FIT-100 measures flow, PU-010A energizes.	FIT-100	Auto	Display run status on PLC
PU-010B	Ferric Pump	Units can be controlled in Hand or in Auto	-	-	Pump icon will indicate run status
		If FIT-200 measures flow, PU-010B energizes.	FIT-100	Auto	Display run status on PLC
PU-020	Lime Pump	Units can be controlled in Hand or in Auto	-	-	Pump icon will indicate run status
		Speed Control (1 train only) If pH-120> 8.5, PU-020 will reduce speed. If pH < 8, pump will increase pump speed. If pH is between 8 to 8.5, pump will maintain pump speed.	pH-110 / pH-120	Auto – pH set point adjustable at panel	Display run status on PLC
		Speed Control Disabled If flow is detected by both trains, speed control is disabled.	FIT-100 / FIT-200	Auto	Display run status on PLC
PU-030 A	Polymer Pump	Units can be controlled in Hand or in Auto	-	-	Pump icon will indicate run status

		Polymer pump energizes if PU-200 A is on	PU-200A	-	Display run status on PLC
PU-030 B	Polymer Pump	Units can be controlled in Hand or in Auto	-	-	Pump icon will indicate run status
		Polymer pump energizes if PU-200 B is on	PU-200B	-	Display run status on PLC
PU-200 A	Transfer Pump	Units can be controlled in Hand or in Auto	-	-	Pump icon will indicate run status
		If LT-130 measures < 3', PU-200A off. If LT-130 measures >3', PU-200A on.	LT-130	Auto – Set points adjustable at panel	Pump icon will indicate run status
		If LT-130 measures >4.5', PU-200A off. If LT-130<4.5', PU-200A on.	LT-130	Auto – Set points adjustable at panel	Pump icon will indicate run status
PU-200 B	Transfer Pump	Units can be controlled in Hand or in Auto	-	-	Pump icon will indicate run status
		If LT-230 measures < 3', PU-200B off. If LT-230 measures >3', PU-200B on.	LT-130	Auto – Set points adjustable at panel	Pump icon will indicate run status
		If LT-230 measures >4.5', PU-200B off. If LT-230<4.5', PU-200B on.	LT-130	Auto – Set points adjustable at panel	Pump icon will indicate run status
PU-300	Discharge Pump	Units can be controlled in Hand or in Auto	-	-	Pump icon will indicate run status
		Pump off at LSL-200	LSL-200	-	Level indicator on panel

		Pump on at LSH-200	LSH-200	-	Level indicator on panel
		High Level Alarm at LSHH-200	LSHH-200	-	High Level Alarm
MX-010 /020/030	Mixer	Units can be controlled on/off manually	-	-	-

3.0 GENERAL STARTUP PROCEDURE

3.1 After Dormancy Pre-start-up Procedures

The following steps shall be taken after extended periods of dormancy, prior to general startup of the WTP.

Task	Check
Perform a visual inspection of the system enclosure for signs of water/snow ingress.	.
Inspect hose and pipe for signs of leaks, abrasion, or other physical damage.	☐
Inspect Reactor tanks as follows: • Signs of leaks, abrasion, or other physical damage. • Tank connections for signs of strain or stress. • Make sure that valves at the inlet and outlet are opened.	☐
Inspect Blowers as follows: • Signs of abrasion, or other physical damage on all external accessories such as relief valves, gauges and filters. • Make sure that valves at the inlet and outlet are opened.	☐
Inspect Diesel Pumps as follows: • Signs of leaks, abrasion, or other physical damage. • Check for and tighten loose attaching hardware. • Make sure that valves at the inlet and outlet are opened. • Check oil levels and lubricate as necessary.	☐
Inspect Ferric Sulphate pump as follows • Signs of leaks, abrasion, or other physical damage. • Make sure that valves at the inlet and outlet are opened.	☐
Inspect Hydrated Lime pumps as follows • Signs of leaks, abrasion, or other physical damage. • Inspect condition of internal pump hose. • Make sure that valves at the inlet and outlet are opened.	☐
Inspect Polymer pump as follows: • Signs of leaks, abrasion, or other physical damage. • Inspect condition of internal pump hose. • Make sure that valves at the inlet and outlet are opened.	☐
Inspect Level Transmitter as follows: • Monitor debris and ensure the sensor is level and mounted perpendicular to water level. • Check and roughly compare measurement on the PLC with the real on the field.	☐
Inspect pH sensors as follows: • Monitor debris and deposition of scaling on the transmitter. Perform a cleaning of the sensors as necessary.	☐

-

Insect Bag Filter vessel as follows: • Signs of leaks, abrasion, or other physical damage. • Inspect filter bag and replace as necessary	☐
Inspect Inlet Flow Meter as follows: • Signs of leaks, abrasion, or other physical damage. • Inspect flow sensor for scaling. Clean as necessary.	☐
Inspect Geotube Bag as follows: • Ensure inlet connection points are securely attached. • Ensure height of bag does not exceed recommended limits. If so, decommission geotube bag. • Clean geotube surface of sediment and scaling to prevent fouling using a push broom, or gentle pressure washing.	☐

3.2 Commissioning

After pre-start-up procedures are completed, the system can be energized. The following procedure reflects a high level overview of equipment checks to be performed. Detailed instructions can be found in the product specific manuals. Before any mechanical intervention, disconnect the electrical supply.

3.2.1 *Hydrated Lime Pump / Polymer Pump*

Task	Check
Ensure that all protections (cover, cover window, ventilator hood, coupling protection) are in place before operating the pump.	☐
Check the direction of rotation of the pump.	☐
Make sure that valves at the inlet and outlet are opened.	☐
Start the pump by checking its direction of rotation through the cover window.	☐
Check the flow and discharge pressure and adjust rollers if these figures don't match the pump specifications.	☐

IMPORTANT: Ensure lime pump valves remains open during operation. Should valves be left in the closed position, the process line can over pressurize, leading to a rupture of the chemical hose.

3.2.2 *Blowers*

Task	Check
Ensure impeller rotation is correct.	☐
Check filters and inspect for signs of fouling. Replace if necessary.	☐

-

Ambient temperature – Check room and discharge air temperatures. Exhaust air should not exceed 135ºC.	☐
Working pressure and vacuum values – Adjust relief valve pressure or vacuum setting, if needed.	☐
Motor current – Check that the supply current matches recommended current rating on product nameplate.	☐
Electrical overload cutout – Check that the current matches the rating on product nameplate.	☐

3.2.3 *Ferric Pump*

Task	Check
Ensure pump is energized.	☐
Make sure that valves at the inlet and outlet are opened.	☐
Start the pump manually, in order to prime and adjust dosing rates.	☐
Prime the pump. See manual for details.	☐
Adjust dosing according to inlet water flow rate. See below.	☐
Check dosing rate with calibration cylinder.	☐

3.2.4 *Motorized Valve*

Task	Check
Ensure valve is energized.	☐
Ensure valve opens/closes reliably in manual mode:	☐

3.2.5 *Diesel Pumps*

Task	Check
Check fuel level and oil levels in the engine, air compressor, pump bearings and seal housing.	☐
Consult engine operations manual before attempting to start the unit.	☐
Allow pump to prime.	☐
Adjust engine speed to desired output.	☐

3.2.6 *pH Sensors*

Task	Check
Ensure sensor is calibrated.	☐
Ensure the pH reading displayed locally at the Walchem panel is transmitted correctly to PLC.	☐

3.2.7 *Geotube*

Task	Check
Ensure surface is clean of sediment and debris.	☐
Ensure all inlet valve are open.	☐
Ensure height of geotube does not exceed manufacturer recommended limit.	☐

4.0 OPERATION

4.1 General Operating Instructions

Operation of the WTP will consist of ensuring major equipment (blowers, dosing pumps, motorized valves, level transmitters) is running correctly, and ensuring influent/effluent monitoring and sampling are conducted on schedule.

The drivers for pH adjustment and TSS treatment are operation of the Ferric Sulfate, Hydrated Lime and Polymer Pump, along with the proper performance of the aeration blowers and diffusers equipment.

The unit will run manually. During short term dormancy, the unit can be operated in a “Sleep Mode” where the system is run in a re-cycle status using two submersible pumps inside TA-130 and TA-230 to recirculate water from the end of each train to the beginning of each train. Chemical injection is disabled during dormancy, however, the lime mixer should remain on to maintain suspension of the hydrated lime slurry. Blowers will also remain on to ensure suspension of solids within the reactor tanks.

Parameters to be measured and recorded daily include temperature, pH (typical values are between 6.5 and 9), and TSS. The system must be monitored regularly to ensure pH does not drop below the low level set point or raise above the level set point.

The pH reading should be recorded daily. The pH should be cross referenced regularly with a hand held device. Should the pH differ from the hand held reading, the operator should clean the pH electrodes using a 2-5% solution of hydrochloric acid.

System data can be recorded in the spreadsheet provided in Appendix B. Regular daily monitoring of parameters such as pH, temperature, TSS, and Geotube height must be recorded to ensure proper operation.

4.2 Operating Procedure

The following section will outline the step-by-step procedures for operating the treatment system.

4.2.1 *Standard Operation*

Inlet

The inlet pond level should be checked and recorded prior to start up. Two pond pumps can be utilized to transfer raw water to the treatment system. Usage will depend on the volume of treatment required. At low pond levels, one pond pump and one process train can be utilized. At high levels, both pumps can be utilized to increase the treatment volume.

All pump discharge valves must be opened. The pumps (PU-100 A/B) shall be placed in “Hand” at the PLC. This will energize the pumps and begin transfer of water to the treatment system. The pumps will only turn on if a high level is measured by LSH-110/210 or LT-130/230.

Operators must ensure the inlet pond level is monitored, as the pumps do not include a low level shut off.

Ferric Pumps (PU-010 A/B)

Water is transferred from the inlet pond to two reactor tanks (TA-110 and TA-210) where ferric sulphate is injected. The dosage rate of the ferric pumps is determined by the inlet quality of the raw water and can range from 0 to 20 mg/l. The dosage rate is to be determined by the operator.

The dosage rate must be set manually at the pump. Once set, the pump can be set to “Auto” at the control panel. The ferric pumps, PU-010 A and PU-010 B, will energize when flow is detected by FIT-100 and FIT-200 respectively.

Before starting the pumps, all discharge valves must be opened.

Lime Pump (PU-020)

After coagulant addition, water flows by gravity to TA-120 and TA-220 where hydrated lime is injected into the process. The dosage rate of the Lime pump is determined by the inlet quality of raw water and the pH required, and can range from 0 to 300 mg/l. The dosage rate is to be determined by the operator.

In manual mode, the speed of the pump can be set at the pump VFD, located on the lime pump stand.

Pump speed will be dependent on the pH measured by pH-120, and the pH set point entered into the panel (adjustable by an operator). At a setpoint of 8.5, the pump will increase speed if pH-120 measures a pH below 8. If pH-120 measures a pH above 9, pump speed will decrease. If pH is measured between 8 to 8.5, the dosage rate will remain the same.

-

At a pH above 9.5, MV-120 and MV-220 will close.

The lime pump will operate continuously, with chemical consistently recirculated to the lime mixing tank (TA-020). This is done to ensure the lime slurry does not settle and solidify in the piping system. At the end of every shift, clean water must be flushed through the piping in order to prevent fouling. Flushing may be required more frequently depending on operational conditions.

Due to the possibility of fouling, the lime pump system must be monitored for pressure consistently.

Lime Solution Make Up

Hydrated lime solution is made manually, with the solution concentration ranging from 5-10% depending on volume of raw water to be treated. A concentration of 5% is recommended to minimize line fouling caused by the lime slurry. Higher concentrations can be made, but more frequent line flushing will be required.

The lime tank mixer is operated from the panel, and should be operated continuously to prevent the slurry from solidifying.

Polymer Pumps (PU-030 A/B)

The dosage rate of the ferric pumps is determined by the inlet quality and can range from 0 to 3 mg/l.

The dosage rate must be set manually at the pump. Once set, the pump can be set to “Auto” at the control panel. The polymer pumps, PU-020 A and PU-020 B, will energize when the transfer pumps, PU-200 A and PU-200 B are energized.

Before starting the pumps, all discharge valves must be opened.

Polymer Solution Make Up

Polymer solution is made manually, with concentration ranging from 0.1 to 0.25% depending on volume to be treated.

The polymer tank mixer is operated from the panel, and should be kept on at all times to maintain uniformity of the solution.

Blowers

The blowers are operated from the panel, and should be energized at all times when raw water is being processed in the reactor tanks.

Both blowers (BL-100A and BL-100B) can be set in “Auto” at the panel, at which point they will run continuously until the water level in TA-130 and TA-230 is measured to be less than 6”. This level is settable at the panel.

Raw Water Bag Filter

The bag filter provides filtration of water required for chemical makeup. The filter bags should be replaced periodically when differential pressure across the filter exceeds approximately 20 psi.

Geotube Bags

Water is transferred from the final reactor tanks (TA-130 and TA-230) by diesel generated trash pumps (PU-200 A and PU-200 B) to the geotube pond. The transfer pumps, PU-200A and PU-200B are operated based on the level measured by the reactor tank level transmitters, LT-130 and LT-230 respectively. These set points are adjustable at the panel.

The height of the geotube bags must be monitored regularly.

4.3 Daily Operator Checklist

The following steps outline day-to-day operational procedures for the WTS.

Standard Operation

Task	Check
Check inlet pond and record water level	☐
Check lime and polymer solutions, make up additional solution as required.	☐
Place PU-100 A (and PU-100 B if necessary) in Hand mode at the control panel.	☐
Set Ferric Sulphate pump (PU-010 A / B) dose rate and place pump in Auto at control panel. Ensure pump energizes when flow is detected by FIT-100 or FIT-200.	☐
Turn on hydrated lime pump (PU-020 A) manually. Adjust dose rate based on flow measured by inlet flow meters.	☐
Monitor hydrated lime pump pressure gauge. If pressure gauge is showing a pressure greater than 15 psi, flush line with water.	☐
Set polymer pump dose rate at panel. Set in “remote” mode. Set pump to auto at panel. Pump will turn on when PU-200A/B energize.	☐
Set Blowers (BL-100 A / BL-100B) to Hand.	☐
Once onion tanks are full, set PU-200A/B to Auto (if using both trains). Ensure downstream valves to geotube bags are open.	☐

Observe reactor tank water levels to ensure inlet and outlet flows are balanced.	☐
Observe and record height of geotube bags. Height must not exceed 6 feet.	☐
Set PU-300 to auto in the panel. Once the water in the pond reaches the operating float switch, the pump will be energized.	☐
Discharge vales must be set manually to allow for discharge to the creek, or recycle back to the inlet pond. Set valves in correct position.	☐

Daily Shutdown

Task	**Check**
Set inlet pump to Off position	
Allow reactor tanks to be pumped down to ¼ volume.	☐
Turn off chemical pumps.	☐
Flush lime line with water	☐
Keep lime mixer (Mix-020) on to ensure hydrated lime slurry remains in liquid form.	☐
If tanks are lowered, blowers can be turned off. If tanks are kept full, energize recirculation pumps.	☐
Check lime and polymer solutions, make up additional solution if required.	☐
Turn transfer pumps (PU-200 A/B) and discharge diesel pump (PU-300) off.	☐

APPENDIX A –DRAWINGS



NOTES:

PU-200A/B- Transfer Pump
PU-300- Discharge Pump
FT-300- Flow Meter
LS- Level Switch
-LSHH 200
-LSH 200
-LSL 200

Process lines
Instrumentation lines

Process based on conceptual desgin by Golder Associates

REVISION TABLE

No.	DESCRIPTION	DATE
0	Original Issue	2018/04/30
1	Record Drawing	2018/07/31

McCUE ENGINEERING CONTRACTORS

CLIENT:

BAFFINLAND IRON MINES CORPORATION

FULL SITE LAYOUT
GENERAL ARRANGEMENT DRAWING
Waste Rock Pile Water Treatment Plant

DATE: July 31, 2018	SCALE: NTS
DATA BY: R.B.	MCCUE JOB NO: 137-0001
DRAWN BY: L.S	FIG: GA-001

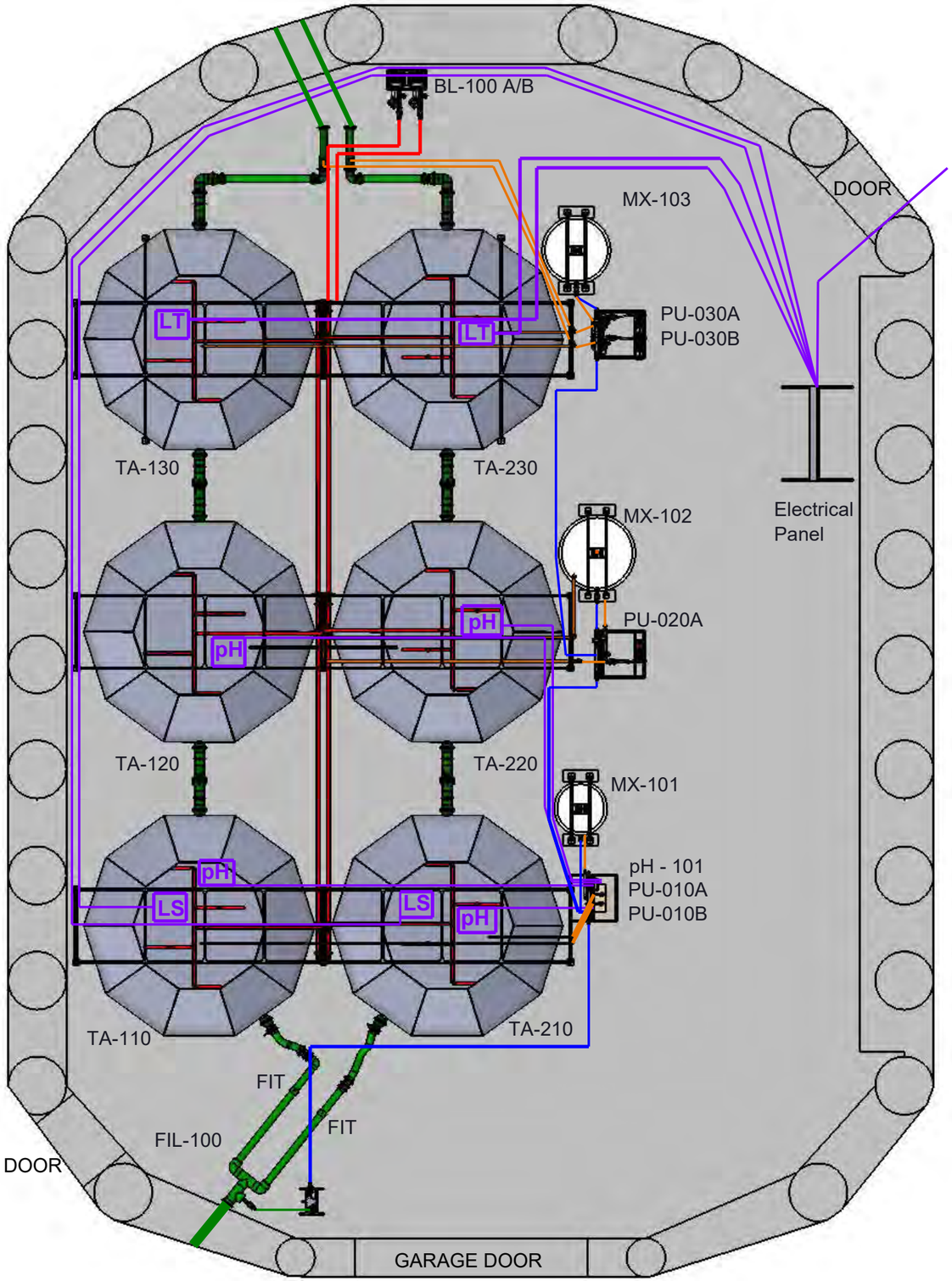

LEGEND

BL-100 A/B - Blower
FIL-100 - Bag Filter
MX-101 - Ferric Mixing Station
MX-102 - Lime Mixing Station
MX-103 - Polymer Mixing Station
PU-010 A/B - Ferric Pump
PU-020 - Lime Pump
PU-030 A/B - Polymer Pump
TA-110 - Ferric Process Tank (Train 1)
TA-210 - Ferric Process Tank (Train 2)
TA-120 - Lime Process Tank (Train 1)
TA-220 - Lime Process Tank (Train 2)
TA-130 - Polymer Process Tank (Train 1)
TA-230 - Polymer Process Tank (Train 2)
pH-101 - pH Controller
FIT - Flow Meter
pH - pH Sensor
LS - Level Switch
LT - Level Transmiter

Notes:

- Process Lines
- Water Make-up Lines
- Chemical Lines
- Air Lines
- Instrumentation Line

Process based on conceptual design by Golder Associates

REVISION TABLE

No.	DESCRIPTION	DATE
0	Original Issue	2018/05/01
1	Record Drawing	2018/08/17

McCUE ENGINEERING CONTRATORS

CLIENT:

BAFFINLAND IRON MINES CORPORATION

BUILDING LAYOUT
GENERAL ARRANGEMENT DRAWING
Waste Rock Pile Water Treatment Plant

DATE: August 17, 2018	SCALE: AS SHOWN
DATA BY: R.B	JOB NO: 137-0001
DRAWN BY: L.S	FIG: GA-002

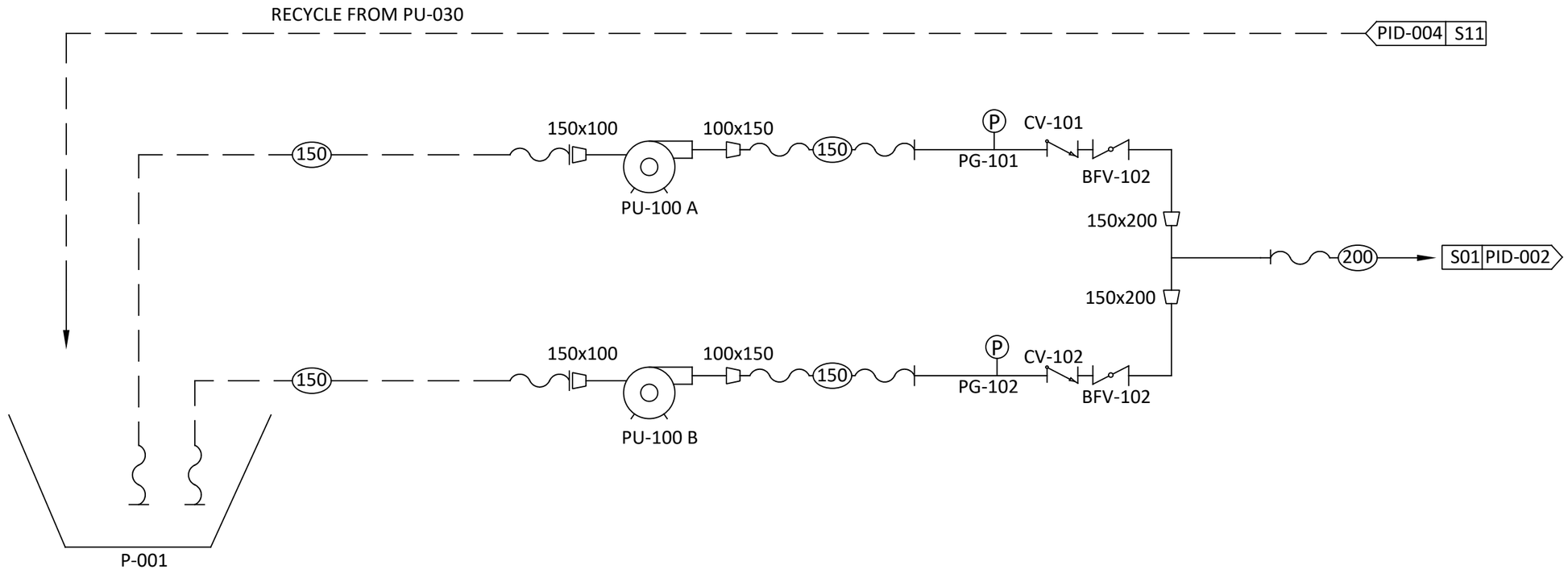

P-001
Inlet Storage Pond

PU-100 A/B
Pond Transfer Pump
Model: Prime Aire PA4A60-404ST
Power: Diesel Driven
Capacity: 140m³/hr

LEGEND :

- Hose
- Sch. 80 PVC Pipe
- Butterfly Valve
- Check Valve
- Reducer
- Pressure Gauge

Process based on conceptual design by Golder Associates

NO.	REVISION TABLE	DATE
0	Original Issue	April 30, 2018
1	Record Drawing	July 31, 2018

McCUE ENGINEERING CONTRACTORS

CLIENT:

BAFFINLAND IRON MINES CORPORATION

Waste Rock Water Storage Pond
PROCESS & INSTRUMENTATION DIAGRAM
Waste Rock Pile Treatment Plant

DATE: July 31, 2018	SCALE: NTS
DATA BY: R.B.	MCCUE JOB NO: 137-0001
DRAWN BY: M.T.	FIG: PID-0001

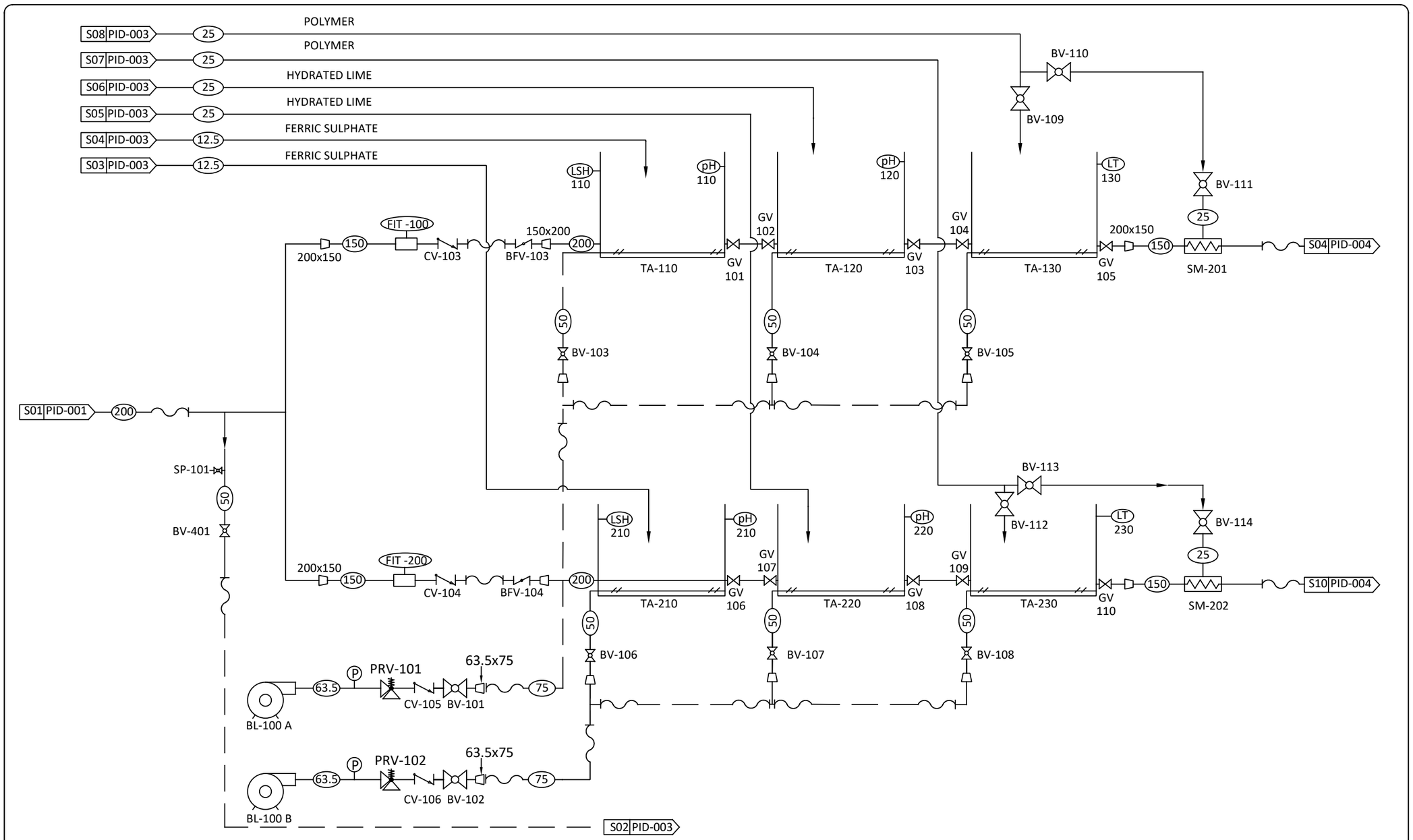

BL-100 A/B
Blower
Model: Gast R7100A-3
Power: 208V/3hp/60Hz
Capacity: 500m³/hr @ 1.9m TDH

TA-110/210
Ferric Reaction Tank
Material: Polyurethane
Size: 5.9m W x 1.5 H
Capacity: 24,820 Liters

TA-120/220
Lime Reaction Tank
Material: Polyurethane
Size: 5.9m W x 1.5 H
Capacity: 24,820 Liters

TA-130/230
Polymer Reaction Tank
Material: Polyurethane
Size: 5.9m W x 1.5 H
Capacity: 24,820 Liters

FT-100/200
Influent Flow Meter
Model: GF Signet 3-2551-P1-41

LT-130/230
Level Transmitter
Model: Echosonic 11 LU27

pH-110/120/210/220
pH Meter
Model: Walchem WEL-PHF-NN

LEGEND:

- Hose
- Sch. 80 PVC Pipe
- Butterfly Valve
- Check Valve
- Reducer
- Pressure Gauge
- Static Mixer
- Gate Valve
- Pressure Relief Valve
- Ball Valve
- Sample Port
- Flow Meter
- Level Switch
- pH Sensor
- Level Transmitter

Process based on conceptual design by Golder Associates

NO.	REVISION TABLE	DATE
0	Original Issue	April 30, 2018
1	Record Drawing	July 31, 2018

McCUE ENGINEERING CONTRACTORS

CLIENT:

BAFFINLAND IRON MINES CORPORATION

REACTION TANKS
PROCESS & INSTRUMENTATION DIAGRAM
Waste Rock Pile Water Treatment Plant

DATE: July 31, 2018	SCALE: NTS
DATA BY: R.B.	MCCUE JOB NO: 137-0001
DRAWN BY: M.T.	FIG: PID-0002

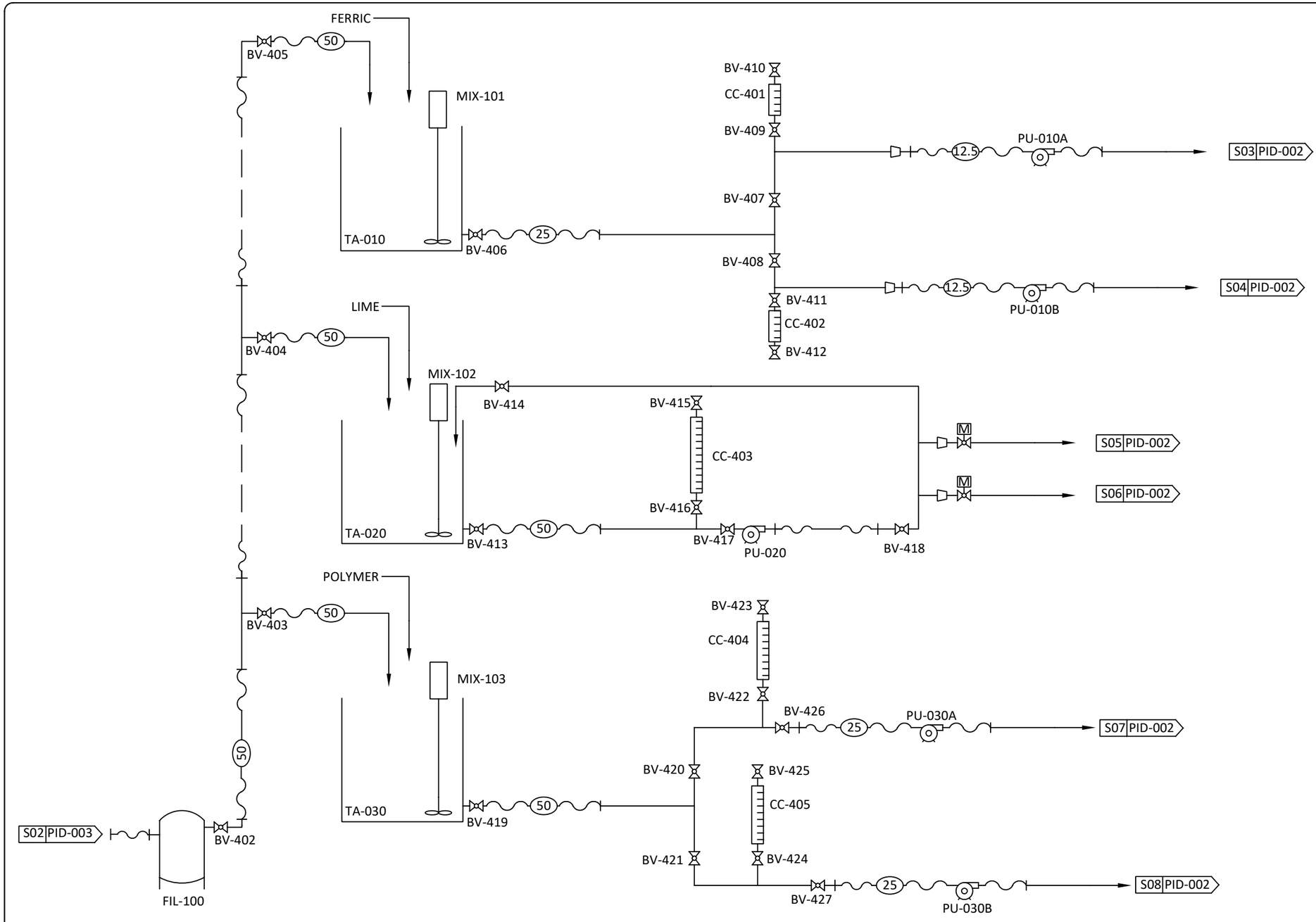

LEGEND:

- Hose
- Sch. 80 PVC Pipe
- Ball Valve
- Reducer
- Motorized Ball Valve

Process based on conceptual design by Golder Associates

NO.	REVISION TABLE	DATE
0	Original Issue	April 30, 2018
1	Record Drawing	July 31, 2018

McCUE ENGINEERING CONTRACTORS

CLIENT:

BAFFINLAND IRON MINES CORPORATION

CHEMICAL MAKEUP
PROCESS & INSTRUMENTATION DIAGRAM
Waste Rock Pile Water Treatment Plant

DATE: July 31, 2018	SCALE: NTS
DATA BY: R.B.	MCCUE JOB NO: 137-0001
DRAWN BY: M.T.	FIG: PID-003

FIL-100
Bag Filter
Model: FTI 830-2P-150-CS-BS-P13-DP
Bag Size: 5 Micron

PU-010A/B
Ferric Chemical Pump
Model: Welchmen EHE31E1-VC
Power: 115 VAC/1hp/60Hz
Capacity: 21 LPM @ 106m TDH

PU-020
Lime Chemical Pump
Model: Flowmotion FR25-HR30HR
Power: 230V/3hp/60Hz
Capacity: 570 LPM @ 42m TDH

PU-030
Polymer Chemical Pump
Model: Flowmotion FR25-HR30HR
Power: 230V/3hp/60Hz
Capacity: 990 LPM @ 42m TDH

MIX-101
Ferric Mixer
Model: Dynamix DMX-5505K-1
Power: 0.5 HP, 230V/1Ph/60Hz
Shaft: 1" Diameter x 41" Long

MIX-102
Lime Mixer
Model: Dynamix DMX-5505K-2
Power: 0.5 HP, 230V/1Ph/60Hz
Shaft: 1" Diameter x 52" Long

MIX-103
Polymer Mixer
Model: Dynamix DMX-5505K-1
Power: 0.5 HP, 230V/1Ph/60Hz
Shaft: 1" Diameter x 49" Long

TA-010
Ferric Mixing Tank
Material: Polyurethane
Size: Ø 1.2m x 1.3m Height

TA-020
Lime Mixing Tank
Material: Polyurethane
Size: Ø 1.8m x 1.7m Height

TA-030
Polymer Mixing Tank
Material: Polyurethane
Size: Ø 1.6m x 1.6m Height

CC-401/402/403/404/405
Calibration Column

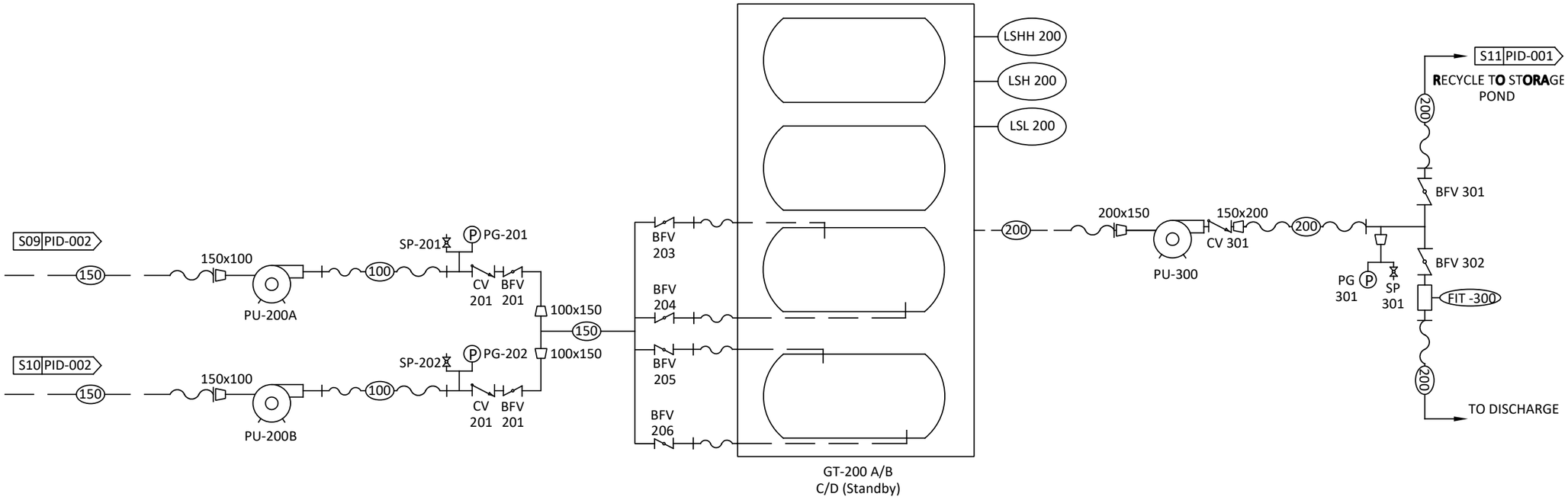

PU-200A/B
Transfer Pump
Model: Prime Aire PA4A60-404ST
Power: Diesel Driven
Capacity: 140m³/hr

GT-200 A/B/C/D
Geotube
Model: Tencare GT500
Dimensions: 60' Circumference x 100' Long

PU-300
Discharge Pump
Model: Prime Aire PA4A60-404ST
Power: Diesel Driven
Capacity: 280m³/hr

FT-300
Flow Meter
Model: Toshiba GFG32

LEGEND:

- Hose
- Sch. 80 PVC Pipe
- Butterfly Valve
- Check Valve
- Reducer
- Pressure Gauge
- Sample Port
- Level Switch

Process based on conceptual design by Golder Associates

NO.	REVISION TABLE	DATE
0	Original Issue	April 30, 2018
1	Record Drawing	July 31, 2018

McCUE ENGINEERING CONTRACTORS

CLIENT:

BAFFINLAND IRON MINES CORPORATION

GEOTUBE FIELD PROCESS & INSTRUMENTATION DIAGRAM

Waste Rock Pile Water Treatment Plant

DATE: July 31, 2018	SCALE: NTS
DATA BY: R.B.	MCCUE JOB NO: 137-0001
DRAWN BY: M.T.	FIG: PID-004

APPENDIX B - MONITORING

McCUE ENGINEERING CONTRACTORS EST. 2000

BROWNFIELDS TO GOLD MINES

Monitoring Spreadsheet

Project Name: BaffinLand Iron Mine
Waste Pile Water Treatment

Date	Time	OP	Inlet Quality			Train 1						Train 2						Discharge							
			Temp ºC	Inlet pH	Inlet TSS mg/L	FIT-100 (L/s)	pH-110	pH-120	Ferric Dosage Stroke/Speed	Lime Dosage Hz	Polymer Dosage Hz	FIT-200 (L/s)	pH-210	pH-220	Ferric Dosage Stroke/Speed	Lime Dosage Hz	Polymer Dosage Hz	FIT-300 (gpm)	FIT-300 Totalizer (gpm)	Geotube Pond pH	Geobag 1 Height (m)	Geobag 2 Height (m)	Discharge pH	Discharge Turbidity NTU	Discharge TSS (mg/L)

Appendix K – BAF-PH1-830-P16-0047– Metal and Diamond Mining Effluent Regulations Emergency Response Plan

The information contained herein is proprietary Baffinland Iron Mines Corporation and is used solely for the purpose for which it is supplied.
It shall not be disclosed in whole or in part, to any other party, without the express permission in writing by Baffinland Iron Mines Corporation.

Note: This is an UNCONTROLLED COPY. All staff members are responsible to ensure the latest revision is used.

Baffinland Iron Mines Corporation

METAL AND DIAMOND MINING EFFLUENT REGULATIONS EMERGENCY RESPONSE PLAN

BAF-PH1-830-P16-0047

Rev 3

Prepared By: Connor Devereaux
Department: Environment
Title: Environmental Superintendent
Date: Dec 16, 2020

Signature: 

Approved By: Francois Gaudreau
Department: Operations
Title: General Manager
Date: Dec 16, 2020

Signature: 

The information contained herein is proprietary to Baffinland Iron Mines Corporation and is used solely for the purpose for which it is supplied.
It shall not be disclosed in whole or in part, to any other party, without the express permission in writing by Baffinland Iron Mines Corporation.

Note: This is an UNCONTROLLED COPY. All staff members are responsible to ensure the latest revision is used.

DOCUMENT REVISION RECORD

Issue Date MM/DD/YY	Revision	Prepared By	Approved By	Issue Purpose
01/15/18	0	BW	WB	Use
01/30/18	1	BW	GR	Use
02/27/19	2	CD	GR	Use
12/16/20	3	CD	FG	Use

The information contained herein is proprietary to Baffinland Iron Mines Corporation and is used solely for the purpose for which it is supplied.
It shall not be disclosed in whole or in part, to any other party, without the express permission in writing by Baffinland Iron Mines Corporation.

Note: This is an UNCONTROLLED COPY. All staff members are responsible to ensure the latest revision is used.

TABLE OF CONTENTS

1 PURPOSE 5

2 SCOPE 5

2.1 CROSS-REFERENCE OF MDMER REGULATIONS, 30 (1) TO 30(2), TO THIS MDMER EMERGENCY RESPONSE PLAN 9

3 RESPONSIBILITIES 10

3.1 GENERAL MANAGER 10

3.2 MINE OPERATIONS 10

3.2.1 MINE OPERATIONS MANAGER 10

3.2.1.1 MINE OPERATIONS SUPERVISOR 10

3.2.1.2 MINE OPERATIONS OPERATORS 10

3.2.1.3 WRF WTP OPERATORS 11

3.3 CRUSHER OPERATIONS 11

3.3.1 CRUSHER OPERATIONS MANAGER 11

3.3.1.1 CRUSHER OPERATIONS SUPERVISOR 11

3.3.1.2 CRUSHER OPERATIONS OPERATORS 11

3.4 ENVIRONMENT 12

3.4.1 ENVIRONMENTAL SUPERINTENDENT 12

3.4.2 ENVIRONMENTAL COORDINATORS AND TECHNICIANS 12

4 DEFINITIONS 12

4.1 SPILL 12

4.2 SPILL PREVENTION 13

4.3 FINAL DISCHARGE POINT 13

4.4 PRESCRIBED DELETERIOUS SUBSTANCES 13

4.5 PH OF THE EFFLUENT 13

4.6 ACUTE LETHALITY 14

5 LEVELS OF EMERGENCY SPILL RESPONSE 14

6 PROTOCOL 16

The information contained herein is proprietary to Baffinland Iron Mines Corporation and is used solely for the purpose for which it is supplied.
It shall not be disclosed in whole or in part, to any other party, without the express permission in writing by Baffinland Iron Mines Corporation.

Note: This is an UNCONTROLLED COPY. All staff members are responsible to ensure the latest revision is used.

6.1 EMERGENCY SPILL RESPONSE PROCEDURES 16
6.1.1 WATERFOWL LANDING IN PONDS 16
6.1.2 SPILLS ON LAND 16
6.1.3 BERM INTEGRITY FAILURE 16
6.1.4 PERIMETER COLLECTION DITCH INTEGRITY FAILURE 17
6.1.5 EMERGENCY SPILLWAY 17
6.1.6 SEEPAGE 18
6.1.7 SPILLS INTO CONTAINMENT FACILITY 18
6.1.8 SPILLS AT THE WRF WATER TREATMENT PLANT 19
6.1.9 NON-COMPLIANT PIT WATER 19

6.2 REPORTING REQUIREMENTS IN THE EVENT OF A SPILL 20

6.3 ENSURING NO ACCIDENTAL DISCHARGE OF NON-COMPLIANT WATER 21
6.3.1 PROCEDURE FOR DISCHARGING CONTAINMENT PONDS 21
6.3.2 ENSURING NO DISCHARGE OF NON-COMPLIANT EFFLUENT 22

6.4 TRAINING FOR SPILL RESPONSE 24
6.4.1 DRILLS AND EXERCISES 24
6.4.1.1 TABLE TOP EXERCISES 24
6.4.1.2 FUNCTIONAL DRILLS 24
6.4.1.3 FULL-SCALE EXERCISES 24

7 REFERENCES AND RECORDS 26

APPENDICES 27
APPENDIX A SITE LAYOUT AND WATER LICENCE/ MDMER MONITORING LOCATIONS 28
APPENDIX B METAL AND DIAMOND MINING EFFLUENT REGULATIONS 29
APPENDIX C EMERGENCY RESPONSE TRUCK INVENTORY 30
APPENDIX D MINE SITE SPILL KIT INVENTORY AND LOCATIONS 31
APPENDIX E NT-NU SPILL REPORT FORM 32
APPENDIX F WASTE POND WATER TREATMENT PLANT OPERATIONS 33

LIST OF TABLES

Table 2-1 External contact list for Notification of a Release 7
Table 6-1 Contact list for MDMER Notification of a Release 21
Table 6-2 BIM Standards for Effluent Quality Discharge Limits for MS-06 and MS-08 23

LIST OF FIGURES

FIGURE 5-1 EMERGENCY SPILL RESPONSE LEVELS 15

The information contained herein is proprietary to Baffinland Iron Mines Corporation and is used solely for the purpose for which it is supplied.
It shall not be disclosed in whole or in part, to any other party, without the express permission in writing by Baffinland Iron Mines Corporation.

Note: This is an UNCONTROLLED COPY. All staff members are responsible to ensure the latest revision is used.

1 PURPOSE

In accordance with Part 3, Section 30 of the Metal and Diamond Mining Effluent Regulations (MDMER), Baffinland Iron Mines Corporation (Baffinland) has prepared an MDMER Emergency Response Plan (ERP).

Revisions to this plan shall be completed based on future modifications to the work scope, emergency and spill response procedures, and the associated approvals. Updates to this Plan shall be completed in accordance with: the terms and conditions of the MDMER, Baffinland's water licenses, QIA Commercial Lease (Q13C301; issued September 6, 2013), the amended Project Certificate No. 005 [issued May 28, 2014 by the Nunavut Impact Review Board (NIRB)] and any subsequent requirements that may be issued.

2 SCOPE

Baffinland's ERP identifies potential environmental, health, and safety emergencies that could arise during the operation phase of the Mary River Project. The ERP establishes the framework for responding to these situations, and applies to all facets of the Mary River Project. It defines requisite organizational roles and responsibilities for project personnel, internal and external contact information, training, resources, and reporting requirements. All Baffinland employees and project contractors are required to comply with the ERP.

Baffinland has two ponds subject to the MDMER, both located at the Mine Site. Baffinland identifies the Waste Rock Facility (WRF) Pond as 'MS-08' and the Crusher Facility (CF) Pond as 'MS-06' for MDMER monitoring and reporting purposes. Both the WRF Pond (MS-08) and the CF Pond (MS-06) are subject to the MDMER (Appendix B).

The WRF at the Mine Site is located approximately one kilometre east of the Deposit 1 mine (Appendix A), and is the storage location for mine area's waste rock and overburden. Surface water runoff originating from the WRF is intercepted by Facility's perimeter collection ditches and directed downstream into the WRF Pond. In pit mine water is also transferred to the WRF Pond via a hard line pipe. Water from the WRF Pond is pumped into the Water Treatment Plant (WTP) for pH adjustment, and subsequently discharged into a Geotube adjacent to the WTP for solids removal via filtering and settling (as per the Waste Pond Water Treatment Plant Operations BAF-PH1-340-PRO-048). The MDMER regulated Final Discharge Point (FDP) for MS-08 is a sampling port located after the discharge pump (Appendix A). Following the FDP, effluent passes through approximately 475 m of hard line pipe and is discharged to the tundra of the approved receiving environment, the Mary River watershed.

The WTP consists of physical and chemical treatment for pH adjustment, chemical precipitation and removal of solids by physical barrier. The water treatment processes include coagulation, pH adjustment, precipitation, flocculation and filtration. Water from the WRF Pond is pumped to the first reactor tank and mixed by an aeration system. Lime and coagulant (ferric sulfate) solutions are added and the pH is

The information contained herein is proprietary to Baffinland Iron Mines Corporation and is used solely for the purpose for which it is supplied.
It shall not be disclosed in whole or in part, to any other party, without the express permission in writing by Baffinland Iron Mines Corporation.

Note: This is an UNCONTROLLED COPY. All staff members are responsible to ensure the latest revision is used.

adjusted to a desired value to assist the precipitation of heavy metals. The intent of coagulation is to neutralize the electric charge on colloidal particles, and assist with the precipitation of heavy metals. The coagulated water then enters a second reactor tank to provide additional mixing and retention time for reactions to occur. The pH adjusted water then flows to the third reactor in which polymer is added for flocculation. Flocculation creates flocs to assist with the separation of solids and liquids in subsequent stages. The overflow from the third reactor tank is pumped to the Geotube to facilitate the removal of solids via a membrane. The filtered final effluent from the Geotube is collected in the sump and discharged to the receiving environment via hard line pipe if internal effluent water quality is in compliance with the applicable discharge criteria. Effluent that does not comply with the applicable discharge criteria is recirculated to the WRF pond for further treatment.

The treatment system has a 280 m^3/hr treatment capacity consisting of two 140 m^3/hr treatment trains. For each train, the water flow rate and pH in Reactor Tanks 1 and 2 are continuously monitored. Ferric sulfate and polymer is added based on flow rate, while lime dosage is based on the pH in Reactor Tank 1. The chemical dosage rate is adjusted in the PLC by the Plant Operator to meet the operating targets. Monitoring of the treated effluent at various stages of the treatment system is conducted to monitor the treatment system performance.

Effluent discharge volumes are monitored and recorded during periods of discharge using a Krohne Enviromag 6” Magnetic Flow Meter. The frequency and volume of effluent discharges from the WTP is dictated by the pond capacity, weather, flight logistics, sample holding times and treatment requirements. Effluent is discharged intermittently on an as-needed basis between late June and early September. MDMER effluent and water quality monitoring is restricted to periods of effluent discharge.

The CF is located approximately four kilometres from the WRF (Appendix A). The CF at the Mine Site consists of a pad that houses three (3) crusher spreads as well as associated run-of-mine, lump and fines ore stockpiles. The CF Pond, which collects storm water runoff diverted in perimeter collection ditches around the CF, is located west of the CF. Water from the CF Pond is treated to remove solids via pond-based settling. The MDMER regulated FDP is a sampling port located after the discharge pump at the north side of the CF Pond, before the connection to the sewage effluent pipeline (Appendix A).

Effluent discharged from the pond at the FDP is pumped to the approved Mary River outfall discharge location approximately 1.3 km southeast of the pond using the Mine Site’s treated sewage effluent pipeline, originating at the Mine Site sewage treatment plant. The frequency and volume of effluent discharged from the CF pond is dictated by the pond capacity, weather, flight logistics, sample holding times and settling requirements. Effluent is discharged intermittently on an as-needed basis between late June and early September. MDMER effluent and water quality monitoring is restricted to periods of effluent discharge.

The information contained herein is proprietary to Baffinland Iron Mines Corporation and is used solely for the purpose for which it is supplied.
It shall not be disclosed in whole or in part, to any other party, without the express permission in writing by Baffinland Iron Mines Corporation.

Note: This is an UNCONTROLLED COPY. All staff members are responsible to ensure the latest revision is used.

This MDMER Emergency Response Plan provides a guide for preventing and controlling the release of water outside of the normal course of events for the WRF Pond and CF Pond operations. This Plan has been prepared in accordance with MDMER (Fisheries Act. 2002-2020), and is to be used in conjunction with Baffinland's Emergency Response Plan (BAF-PH1-830-P16-0007) and the Spill Contingency Plan (BAF-PH1-830-P16-0036). Copies of these Plans can be obtained from:

Baffinland Iron Mines Corporation
2275 Upper Middle Road East, Suite 300
Oakville, ON L6H 0C3
Tel: (416) 364-8820
Fax: (416) 364-0193

TABLE 2-1 EXTERNAL CONTACT LIST FOR NOTIFICATION OF A RELEASE

Department of Environment - Environmental Protection Division PO Box 1000 Station 200 Iqaluit, Nunavut X0A 0H0 Tel: (877) 212-6638, (867) 975-6000 Fax: (867) 975-6099	**Environment Climate Change Canada** Enforcement Officer 933 Mivvik Street, Suite 301-Qiliaut Building P.O. Box 1870 Iqaluit, Nunavut X0A 0H0 Tel: (867)-975-4644 Cell: (867)-222-1925 Fax: (867)-975-4594
Qikiqtani Inuit Association Igluvut Building, 2nd Floor PO Box 1340 Iqaluit, Nunavut X0A 0H0 Tel: (867) 975-8400, 1-800-667-2742 Fax: (867) 979-3238	**Crown-Indigenous Relations and Northern Affairs Canada - Field Operations Division** PO Box 2200 Iqaluit, Nunavut X0A 0H0 Tel: (867) 975-4295 (Field Operations Manager) Cell: (867) 222-8458 Fax: (867) 975-6445
Crown-Indigenous Relations and Northern Affairs Canada – Water Resources Division Building 918, PO BOX 100 Iqaluit, Nunavut X0A 0H0 Tel: (867) 975-4517 (Water Resources Manager) Fax: (867) 975-4560	**Mittimatalik Hunters and Trappers Organization** PO Box 189 Pond Inlet, Nunavut X0A 0S0 Tel: (867) 899-8856 Fax: (867) 899-8095
Nunavut Impact Review Board 29 Mitik Street PO Box 1360 Cambridge Bay, Nunavut X0B 0C0 Tel: 1-866-233-3033 Fax: (867) 983-2594, (867) 983-2574	**Nunavut Water Board** PO Box 119 Gjoa Haven, Nunavut X0B 1J0 Tel: (867) 360-6338 Fax: (867) 360-6369

The information contained herein is proprietary to Baffinland Iron Mines Corporation and is used solely for the purpose for which it is supplied.
It shall not be disclosed in whole or in part, to any other party, without the express permission in writing by Baffinland Iron Mines Corporation.

Note: This is an UNCONTROLLED COPY. All staff members are responsible to ensure the latest revision is used.

Hamlet of Pond Inlet PO Box 180 Pond Inlet, Nunavut X0A 0S0 Tel: (867) 899-8934, (867) 899-8935 Fax: (867) 899-8940	**Department of Fisheries and Oceans** Central and Arctic Region 520 Exmouth Street Sarnia, Ontario N7T 8B1 Tel: (519) 383-1813, 1-866-290-3731 Fax: (519) 464-5128

Baffinland requires all site personnel to be trained on the specific spill response initiation and reporting procedures. Refer to Reference Table B: Internal Distribution List for the Emergency Response Plan in the ERP (BAF-PH1-840-P16-0002) for key internal contact information if a spill occurs. All site personnel must comply with the following procedure upon initiation of a spill response involving a regulated substance:

1. Immediately warn other personnel working near the spill area.
2. Evacuate the area if the health and safety of personnel is threatened.
3. In the absence of danger, and before the spill response team arrives at the scene, take any safe and reasonable measure to stop, contain, and identify the nature of the spill.
4. Notify the Environment and Health and Safety Department and the department who owns the facility, who will initiate further spill response operations.

Upon initiation of spill response, as directed by the Head of Health, Safety and Environment or designate, the following procedure shall be completed by the spill response team:

Source Control – If safe to do so, reduce or stop the flow of product. This may be accomplished with simple actions such as: turning off a pump, closing a valve, sealing a punctured liner with readily available materials, raising a leaking or discharging hose to stop flow, or transferring product from a leaking container (if required activate Baffinland's Emergency Response Plan BAF-PH1-840-P16-0002).

Contain and Control the Free Product – If safe to do so, prevent or minimize the spread of the spilled product. Accumulate/concentrate spilled product in an area to facilitate recovery. Barriers positioned down-gradient of the spill will slow or stop flow of liquid. Barriers can consist of absorbent booms and pads, dykes, berms, fences, and/or trenches (dug in the ground, snow or ice).

Protection – Evaluate the risk of the impacted area to affect the surrounding environment. Protect sensitive ecosystems (i.e. fish-bearing streams) and/or natural resources that are at risk by isolating the area and/or diverting the spilled material to a less sensitive area. Protection/isolation may be achieved through the use of the above mentioned barriers.

Spill Clean-up – Recover and dispose of as much product as possible.

Report the Spill – Record information about the spill such as: date and time of occurrence, location and approximate size, type and amount of discharge product photos, actions already taken to stop and contain the spill, ambient conditions, and any perceived threat to human health and safety or the environment. Reports shall be completed as per Baffinland's Incident Investigation Form (BAF-PH1-810-FOR-0005).

The information contained herein is proprietary to Baffinland Iron Mines Corporation and is used solely for the purpose for which it is supplied.
It shall not be disclosed in whole or in part, to any other party, without the express permission in writing by Baffinland Iron Mines Corporation.

Note: This is an UNCONTROLLED COPY. All staff members are responsible to ensure the latest revision is used.

2.1 CROSS-REFERENCE OF MDMER REGULATIONS, 30 (1) TO 30(2), TO THIS MDMER EMERGENCY RESPONSE PLAN

MDMER Reference	Description	Emergency Response Plan Reference
30 (1)	The owner or operator of a mine shall prepare an emergency response plan that describes the measures to be taken in respect of a deleterious substance within the meaning of subsection 34(1) of the Act to prevent any deposit out of the normal course of events of such a substance or to mitigate the effects of such a deposit.	Entirety of Document
30 (2)(a)	The identification of any deposit out of the normal course of events that can reasonably be expected to occur at the mine and that can reasonably be expected to result in damage or danger to fish habitat or fish or the use by man of fish, and the identification of the damage or danger;	Pages 12 to 16
30 (2)(b)	a description of the measures to be used to prevent, prepare for and respond to a deposit identified under paragraph (a);	Pages 12 to 17
30 (2)(c)	a list of the individuals who are to implement the plan in the event of a deposit out of the normal course of events, and a description of their roles and responsibilities;	Pages 9 to 10
30 (2)(d)	the identification of the emergency response training required for each of the individuals listed under paragraph (c);	Pages 17 to 20
30 (2)(e)	a list of the emergency response equipment included as part of the plan, and the equipment's location; and	Appendix D
30 (2)(f)	alerting and notification procedures including the measures to be taken to notify members of the public who may be adversely affected by a deposit identified under Section 30 paragraph 2(a).	Table 2-1

The information contained herein is proprietary to Baffinland Iron Mines Corporation and is used solely for the purpose for which it is supplied.
It shall not be disclosed in whole or in part, to any other party, without the express permission in writing by Baffinland Iron Mines Corporation.

Note: This is an UNCONTROLLED COPY. All staff members are responsible to ensure the latest revision is used.

3 RESPONSIBILITIES

In the event of an emergency associated with the WRF Pond or CF Pond it will be necessary for multiple departments to work in conjunction with each other. The following outlines the specific responsibilities of those departments.

3.1 GENERAL MANAGER

The General Manager (GM) is responsible for ensuring that each departmental Manager/Superintendent understands the contents of the plan and follows its requirements. The GM is responsible for ensuring that departments contact the appropriate external authorities as per this Plan and the Baffinland Emergency Response Plan (BAF-PH1-840-P16-0002).

3.2 MINE OPERATIONS

3.2.1 MINE OPERATIONS MANAGER

The Mine Operations Manager or designate is responsible for implementing the Plan within their department and area of operation. They must ensure that their personnel understand the contents of this Plan and follow its requirements. They are responsible for implementing an inspection program to ensure that the Plan is being fully implemented and to apply corrective actions in the event of identified non-compliances, non-conformances, and/or issues of concern.

3.2.1.1 MINE OPERATIONS SUPERVISOR

The Mine Operations Supervisor is responsible for the following:

- The health and safety of all persons while managing and directing activities associated with working around the WRF Pond.
- Ensuring all workers and operators are trained and understand this Plan.
- Assist in approved discharging activities.
- Schedule and verify that inspections of the WRF and WRF Pond are completed to assess movement, settlement, or liner damage.
- Schedule and verify that inspections are completed to assess the condition of perimeter collection ditches

3.2.1.2 MINE OPERATIONS OPERATORS

The Mine Operations Operators have the following responsibilities:

- Report all spills and/ or non-compliances to their supervisor.
- Follow procedures outlined in Waste Pond Water Treatment Plant Operations BAF-PH1-340-PRO-048.

The information contained herein is proprietary to Baffinland Iron Mines Corporation and is used solely for the purpose for which it is supplied.
It shall not be disclosed in whole or in part, to any other party, without the express permission in writing by Baffinland Iron Mines Corporation.

Note: This is an UNCONTROLLED COPY. All staff members are responsible to ensure the latest revision is used.

- Understand and follow detailed instructions when assisting with discharging effluent and working around the WRF Pond.
- Maintain the access road to the WRF Pond year round in all weather conditions.

3.2.1.3 WRF WTP OPERATORS

The WRF WTP Operators have the following responsibilities:

- Report all spills and/ or non-compliances to their supervisor.
- Follow procedures outlined in Waste Pond Water Treatment Plant Operations BAF-PH1-340-PRO-048.
- Understand and follow detailed instructions when assisting with discharging effluent and working around the WRF Pond.
- Ensure the internal plant process parameters and field effluent parameters are recorded in the log book daily.

3.3 CRUSHER OPERATIONS

3.3.1 CRUSHER OPERATIONS MANAGER

The Crusher Operations Manager or designate is responsible for implementing the Plan within their department and area of operation. They must ensure that their personnel understand the contents of the plan and follow its requirements. They are responsible for implementing an inspection program to ensure that the Plan is being fully implemented and to apply corrective actions in the event of identified non-compliances, non-conformities, and issues of concern.

3.3.1.1 CRUSHER OPERATIONS SUPERVISOR

The Crusher Operations Supervisor is responsible for the following:

- The health and safety of all persons while managing and directing activities associated with working around the CF Pond.
- Ensuring all workers and operators are trained and understand this Plan.
- Assist in approved effluent discharging activities.
- Schedule and verify that inspections of the CF area and CF Pond are completed to assess movement, settlement, or liner damage.

3.3.1.2 CRUSHER OPERATIONS OPERATORS

The Crusher Operations Operators have the following responsibilities:

- Report all spills to their supervisor.
- Understand and follow detailed instructions when assisting with discharging and working around the CF Pond.

The information contained herein is proprietary to Baffinland Iron Mines Corporation and is used solely for the purpose for which it is supplied.
It shall not be disclosed in whole or in part, to any other party, without the express permission in writing by Baffinland Iron Mines Corporation.

Note: This is an UNCONTROLLED COPY. All staff members are responsible to ensure the latest revision is used.

- Maintain the access road to the CF Pond year round in all weather conditions.

3.4 ENVIRONMENT

3.4.1 ENVIRONMENTAL SUPERINTENDENT

The Environmental Superintendent or designate is responsible for implementing the Plan within their department. They must ensure that their personnel understand the contents of the Plan and follow its requirements. They are responsible for implementing an inspection program to ensure that the Plan is being fully implemented and advise on how best to evaluate, contain and remediate and/or recover any spill associated with the CF Pond and WRF Pond. The Environmental Superintendent is also responsible for all required reporting to regulators regarding WRF Pond and CF Pond water quality, effluent discharging, and spills (Section 6.2) (MDMER, 2020).

3.4.2 ENVIRONMENTAL COORDINATORS AND TECHNICIANS

The Environmental Coordinators and Technicians have the following responsibilities:

- Reviewing and understanding all the applicable plans and procedures associated with environmental aspects of the CF Pond and WRF Pond.
- Contacting their immediate supervisor if uncertain about any of their assigned tasks.
- Inspecting the CF Pond, WRF Pond, and surrounding tundra for:
    - Signs of instability (i.e. collapsing berm, settlement, erosion, cracks, seepage, movement, settlement).
    - Damage to the liner (i.e. tears).
    - Ditch obstructions and issues preventing effective functioning as per design.
- Monitoring and sampling of the FDPs during effluent discharge from the CF Pond and WRF Pond as per BIM Environment's Water Sampling and Flow Measurement SOP and Working Near Water Containment Facilities SOP.
- Respond to spills that are associated with the CF Pond and WRF Pond in conjunction with the Emergency Response Team (ERT) and the Department responsible for the facility.

4 DEFINITIONS

4.1 SPILL

A spill is defined in this Plan as the uncontrolled release of a deleterious substance from its containment into a receiving environment. A deleterious substance is defined as any acutely lethal effluent or any substance that does not meet the criteria in Table 6-2. Under MDMER (2020), Schedule 4 outlines the discharge limits for substances that must be prevented from being deposited into the receiving environment. Such releases are potentially hazardous to humans, vegetation, water resources, aquatic

The information contained herein is proprietary to Baffinland Iron Mines Corporation and is used solely for the purpose for which it is supplied.
It shall not be disclosed in whole or in part, to any other party, without the express permission in writing by Baffinland Iron Mines Corporation.

Note: This is an UNCONTROLLED COPY. All staff members are responsible to ensure the latest revision is used.

organisms and terrestrial wildlife, both directly and through food web interactions. The severity of impact varies depending on several factors, including: the type and quantity of spilled material, the location of the spill, and the time of year. MDMER discharge limits are used as the standards for risk analysis of CF Pond and WRF Pond releases to the environment. As a result, additional levels of spill response have been developed for spills that exceed the MDMER limits. Additional products with the potential for release include hydrocarbon fuels, antifreeze, hydraulic fluid and lubricants from machinery.

4.2 SPILL PREVENTION

Spill prevention is an effective means of maintaining the health and safety of site personnel and the environment. Spills are less likely to occur when adhering to the criteria listed below. Inspections of the CF Pond and WRF Pond are conducted by the Mine Operations, Crusher Operations, and the Environment Department when it is safe to do so. The conditions of the surrounding environment and currently understood risk will determine the frequency of inspections, such as: freshet melt, heavy rain events, increasing pond levels (with limited freeboard space), and changing water quality conditions.

4.3 FINAL DISCHARGE POINT

The FDPs are the identifiable discharge points of a mine beyond which the operator of the mine no longer exercises control over the quality of the effluent (MDMER, 2020). Baffinland has two designated FDPs, one at the WRF Pond and one at the CF Pond where Baffinland has identified that they no longer exercise control over the discharged effluent from the respective pond.

4.4 PRESCRIBED DELETERIOUS SUBSTANCES

Deleterious substances prescribed under the MDMER consist of the following:

- Arsenic;
- Copper;
- Cyanide;
- Lead;
- Nickel;
- Zinc;
- Suspended solids; and
- Radium 226.

4.5 PH OF THE EFFLUENT

Baffinland is authorized to deposit effluent only if the pH of the effluent is equal to or greater than 6.0 but is not greater than 9.5 (MDMER, 2020).

The information contained herein is proprietary to Baffinland Iron Mines Corporation and is used solely for the purpose for which it is supplied.
It shall not be disclosed in whole or in part, to any other party, without the express permission in writing by Baffinland Iron Mines Corporation.

Note: This is an UNCONTROLLED COPY. All staff members are responsible to ensure the latest revision is used.

4.6 ACUTE LETHALITY

Baffinland's effluent is determined to be acutely lethal if "the effluent at 100% concentration kills more than 50% of the rainbow trout subjected to it for a period of 96 hours, when tested in accordance with the acute lethality test set out in section 14.1" (MDMER, 2020). This acute lethality test is conducted with effluent from the WRF Pond and CF Pond on a monthly basis.

5 LEVELS OF EMERGENCY SPILL RESPONSE

To effectively manage emergency responses, Baffinland has adopted a tiered emergency classification scheme (Figure 5-1). Each level of emergency, based on its severity, require varying degrees of response, effort, and support. Each level has distinct effects on normal business operations, as well as requirements for investigation and reporting. The ERP details each level of emergency and classification specific to spill response according to the following:

Level 1 (Low) – Minor accidental release of a deleterious substance with:

- No threat to public health and safety; and/or
- Negligible environmental impact to the receiving environment.

Level 2 (Medium) – Major accidental release of a deleterious substance with:

- Some threat to public health and safety; and/or
- Potential Moderate environmental impact to the receiving environment

Level 3 (High) – Uncontrolled hazard which:

- Jeopardizes project personnel health and safety: and/or
- Potential significant environmental impacts to the receiving environment

The information contained herein is proprietary to Baffinland Iron Mines Corporation and is used solely for the purpose for which it is supplied.
It shall not be disclosed in whole or in part, to any other party, without the express permission in writing by Baffinland Iron Mines Corporation.

Note: This is an UNCONTROLLED COPY. All staff members are responsible to ensure the latest revision is used.

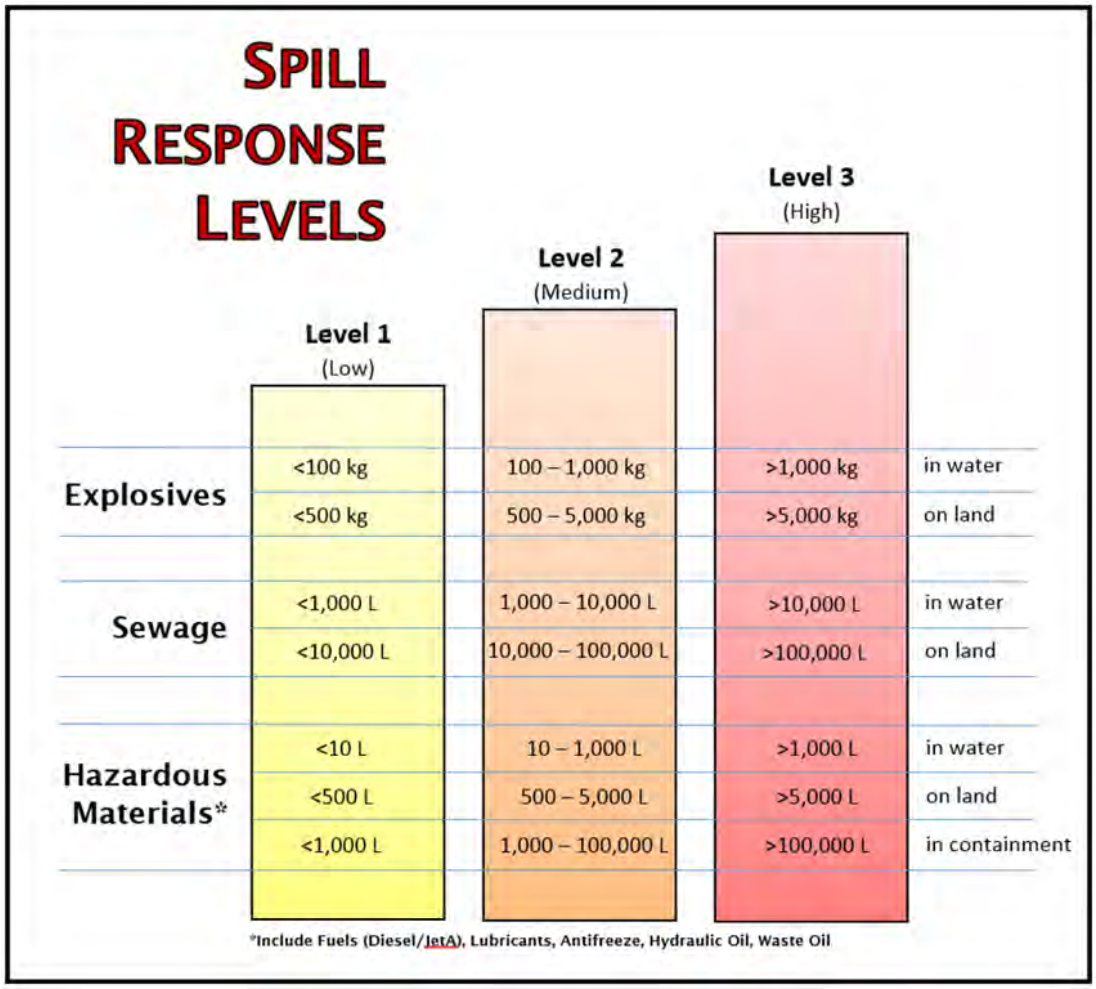

FIGURE 5-1 EMERGENCY SPILL RESPONSE LEVELS

The information contained herein is proprietary to Baffinland Iron Mines Corporation and is used solely for the purpose for which it is supplied.
It shall not be disclosed in whole or in part, to any other party, without the express permission in writing by Baffinland Iron Mines Corporation.

Note: This is an UNCONTROLLED COPY. All staff members are responsible to ensure the latest revision is used.

6 PROTOCOL

6.1 EMERGENCY SPILL RESPONSE PROCEDURES

6.1.1 WATERFOWL LANDING IN PONDS

Migratory birds use the Mary River project area during open-water season in their migration routes. The presence of open water in the WRF and CF Pond mimics the natural habitat of some of these birds. This creates the risk of migratory birds landing in the WRF Pond or CF Pond. During occasions when the WRF Pond and CF Pond contain non-compliant effluent (i.e. effluent with pH < 6.0), that effluent poses a hazard to migratory birds if they land on the ponds. Harming migratory birds is prohibited under the Migratory Birds Convention Act (Environment Canada, 1994).

Deterrent techniques must be employed to prevent birds from landing in the ponds. Deterrent techniques may include human or predatory bird scarecrow statues or noise making devices. If migratory birds land on either of the ponds, all reasonable efforts must be focused on deterring and removing the birds from the area. If birds are impacted by any hydrocarbons, the live birds will be carefully collected and their feathers will be cleaned with dish detergent to remove hydrocarbon residues before the birds are released into the environment. In addition, a wildlife biologist will be consulted to determine additional mitigations for affected birds.

6.1.2 SPILLS ON LAND

The main control techniques for spills on land are to construct physical barriers such as dykes, berms, trenches, booms and fences. Such barriers slow or stop the progression of the spill and also serve as containment to facilitate spill recovery. They should be placed down gradient from the source of the spill as close as possible to the source. Depending on the volume spilled, conditions at the spill location, and available equipment and materials, a berm may be constructed using soil, booms, lumber and snow. Construct temporary berms in a “V” shape or horseshoe shape that will accumulate a thick layer of free product in a convenient location where it can be recovered. Trenches are useful in the presence of permeable soil and when there is potential for spilled product to migrate below the ground surface, to facilitate spill recovery and/or containment.

6.1.3 BERM INTEGRITY FAILURE

Runoff collected in the CF Pond and WRF Pond can be released into the receiving environment if the integrity of the pond berm structure(s) is compromised. Factors that can compromise berm integrity include: construction activities, rainfall, snowmelt, berm design, frost heaving, and poor maintenance. Notify Operations, Environment, and Health and Safety immediately if signs of berm failure are identified during an inspection.

The information contained herein is proprietary to Baffinland Iron Mines Corporation and is used solely for the purpose for which it is supplied.
It shall not be disclosed in whole or in part, to any other party, without the express permission in writing by Baffinland Iron Mines Corporation.

Note: This is an UNCONTROLLED COPY. All staff members are responsible to ensure the latest revision is used.

In the event of failure of a CF Pond or WRF Pond berm, a Code 1 emergency should be called immediately, depending upon the extent of the failure and the potential for impacts to the health and safety of humans and the receiving environment. The ERT will deploy emergency response equipment and ERT personnel to help set up pumps, manage effluent, and help stop/prevent further uncontrolled release into the receiving environment. Operations will provide personnel and equipment necessary to seal or hold the breach. Departmental managers and superintendents of Operations and Environment will provide additional response direction during such an occurrence.

6.1.4 PERIMETER COLLECTION DITCH INTEGRITY FAILURE

In the event of high runoff flows during freshet and heavy rainfall events, the capacity of the perimeter collection ditches that collect runoff from the WRF and CF may be compromised. There is the potential for the water levels in the diversion ditches to rise over the height of the ditch berms, resulting in an uncontrolled overflow release into the receiving environment. A potential result of high water levels in a ditch, even if the ditch berm walls aren't breached, is the seepage of ditch water through permeable ditch berms into the surrounding environment (further discussed in Section 6.1.5).

In such an event, immediate corrective actions must aim to ensure all water in ditches reports to the ponds. Controlled pumping from ditches into the pond may alleviate the volume of water required to be contained by the ditches, and temporary emergency berms can be constructed to increase the capacity of the ditch berms. Any water that overflows and does not report to the ponds must be sampled with a full suite of samples.

During routine inspections of the perimeter collection ditches, flowing water may be observed originating from the toe of the collection ditch berms, potentially indicating water in the ditch as the source, and that the integrity of the ditch has been compromised. In such an event, temporary emergency berms should be constructed to ensure contact water in the Facility reports to the pond. Water accumulating in the Facility should be pumped directly to the pond to bypass the suspected berm integrity failure location.

Preventative efforts must include daily inspections of the perimeter collection ditches at both the WRF and CF. Inspections must include visual assessments of all culvert crossings to ensure there are no blockages that would prevent the free flow of runoff. Personnel must notify their supervisors of impending overflow situations to enable an effective emergency response.

6.1.5 EMERGENCY SPILLWAY

In the event that runoff inflows to the CF Pond and WRF Pond exceed the rate that can be intentionally discharged for a prolonged period of time, pond levels may reach an elevation that results in effluent being released to the receiving environment via the engineered emergency spillway. In such an event, the first mitigative response will be to implement an emergency controlled discharge to prevent effluent from being released via the emergency spillway. The plan to implement an emergency controlled discharge will

The information contained herein is proprietary to Baffinland Iron Mines Corporation and is used solely for the purpose for which it is supplied.
It shall not be disclosed in whole or in part, to any other party, without the express permission in writing by Baffinland Iron Mines Corporation.

Note: This is an UNCONTROLLED COPY. All staff members are responsible to ensure the latest revision is used.

be formulated by the Operations and Environmental Managers/Superintendents. If the controlled emergency discharge does not lower the level of effluent in the pond(s), the emergency spillway will be used as designed, to release volumes of effluent that exceed the pond capacity and prevent failure of the pond berm structures. In such an occurrence, close monitoring of the pond and emergency spillway is required to assess the integrity of the berms and identify any erosional degradation of the berms, spillway and surrounding tundra. Monitoring to be conducted in the event that the emergency spillway is used, includes inspecting pond infrastructure and adjacent tundra areas for signs of cracking, slumping, movement and/or the formation of sinkholes. As the level of control is significantly reduced when using the emergency spillway, a controlled emergency discharge is the first and preferred mitigative response to be undertaken. If signs of instability or erosional degradation are noticed during a spillway discharge, the Mine Operations, Crushing and Environmental Superintendents should be notified immediately.

In the event of a controlled emergency or spillway discharge, a full suite sample set, including the MDMER-FDP and an acute lethality sample will be collected to determine the quality of the effluent being discharged into the receiving environment. Volumes of effluent released during such an event will be measured using a flow meter or suitable estimation method (i.e. flow rate extrapolation) and recorded.

6.1.6 SEEPAGE

The potential exists for runoff from high precipitation events and snowmelt at the WRF or CF to saturate the underlying substrate resulting in the release of seepage outside of containment areas, via active-layer groundwater flow, that does not report to the ponds. This groundwater flow may not be captured by the keyed in pond liner and the seepage will flow through the substrate to the surrounding environment. Another potential effect of runoff from high precipitation events and snowmelt is high water levels in the perimeter collection ditches, allowing water to seep through permeable berm walls into the surrounding environment.

Close monitoring of the areas surrounding the WRF and CF will be conducted during the open-water season. Inspections will look to identify newly formed wet areas, flowing water, and/or areas of pooling. If suspected seepage is observed, the Operations and Environmental Superintendents will be notified immediately. If seepage is confirmed, all reasonable and safe emergency containment methods must be implemented to capture the seepage and/or minimize the extent of seepage migration. For example, an emergency containment ditch and sumps may be utilized to capture observed seepage. This seepage must be pumped back into the pond, and any seepage that can't be contained will be sampled with a full suite sample set to determine potential impacts on the receiving environment. Any water from the Facility must be arrested from entering the collection ditches if they are suspected to have areas of seepage.

6.1.7 SPILLS INTO CONTAINMENT FACILITY

If hazardous products (i.e. hydrocarbons or antifreeze) are released into the CF Pond and WRF Pond, spill response should be initiated as outlined in Section 2 of this Plan. To determine the best method for spill

The information contained herein is proprietary to Baffinland Iron Mines Corporation and is used solely for the purpose for which it is supplied.
It shall not be disclosed in whole or in part, to any other party, without the express permission in writing by Baffinland Iron Mines Corporation.

Note: This is an UNCONTROLLED COPY. All staff members are responsible to ensure the latest revision is used.

containment and recovery, the Environmental Superintendent or their designate should be consulted. Responses to a spill in a pond can include various containment and recovery techniques, including skimming and booming, in concert with water treatment. Mechanical recovery equipment (i.e. skimmers and oil/water separators) will be utilized, as required.

6.1.8 SPILLS AT THE WRF WATER TREATMENT PLANT

The effluent from the WRF Pond is treated in the WTP in a three step process involving the injection of chemicals into temporary storage tanks, and a final step of filtration in the Geotube. Further protocols on plant operation and management can be found in Appendix F Waste Rock Pile Water Treatment Plant Operations (BAF-PH1-340-PRO-048). The water is first treated in the temporary storage tanks using iron precipitation, hydroxide precipitation, and flocculation, while pH is monitored to indicate when pH reaches desired values. With a desired pH value, the partially treated effluent is discharged from the WTP into the Geotube for removal of suspended solids. The effluent from the Geotube sump can be discharged either back into the WRF Pond, if deemed non-compliant after settling, or into the receiving environment if deemed compliant (refer to section 6.3.1 and 6.3.2 for guidance on this decision).

Chemicals used during the treatment of the WRF Pond effluent include ferric sulphate, lime and polymer. Additionally, there is fuel and other hydrocarbon products present at the plant for heating and power generation purposes. These hazardous products would necessitate spill response if released into the environment. Figure 5-1 must be consulted to determine the level of Emergency Spill Response in the event of a spill at the WRF Pond.

6.1.9 NON-COMPLIANT PIT WATER

If non-compliant pit water accumulates within the pit, a water transfer process will be implemented to transfer water from the pit to the WRF Pond to contain and eliminate the potential for non-compliant water migrating outside of the pit benches into the surrounding mountain tundra.

During the transfer of pit water, the pump, hoses and/or water truck will be routinely monitored for leaks. If non-compliant water is released through the pit or during transfer, on land control techniques, such as berms, dykes, trenches, and fences, will be implemented. Such barriers slow the progression of water migration and also serve as containment to facilitate recovery. They should be placed down gradient from the source of the release, and as close as possible to the source. Depending on the volume released, the site of the release, as well as available equipment and materials, a temporary barrier may be built with soil, lumber and/or snow. Trenches are useful in the presence of permeable soil to facilitate recovery and/ or containment when the released product is potentially migrating below the ground surface.

The information contained herein is proprietary to Baffinland Iron Mines Corporation and is used solely for the purpose for which it is supplied.
It shall not be disclosed in whole or in part, to any other party, without the express permission in writing by Baffinland Iron Mines Corporation.

Note: This is an UNCONTROLLED COPY. All staff members are responsible to ensure the latest revision is used.

6.2 REPORTING REQUIREMENTS IN THE EVENT OF A SPILL

In the event of a spill of deleterious substances from the WRF Pond or CF Pond, the spill report submitted by the Environmental Superintendent to applicable regulators (Table 6-1) must contain the following information:

- The name, description and concentration of the deleterious substance deposited;
- The estimated quantity of the spill and how this estimate was achieved;
- The day on which, and hour at which, the deposit occurred;
- The quantity of the deleterious substance that was deposited at a place other than through a FDP and the identification of that place, including the location by latitude and longitude and, if applicable, the civic address;
- The quantity of the deleterious substance that was deposited through a FDP and the identification of that discharge point;
- The name of the receiving body of water, if there is a name, and the location by latitude and longitude where the deleterious substance entered the receiving body of water;
- The results of the acute lethality tests conducted under subsection 31.1(1) or a statement indicating that acute lethality tests were not conducted but that notification was given under subsection 31.1(2);
- The circumstances of the deposit, the measures that were taken to mitigate the potential effects of the deposit and, if the emergency response plan was implemented, details concerning its implementation; and
- The measures that were taken, or that are intended to be taken, to prevent any similar occurrence of an unauthorized deposit. (MDMER, 2020)

The information contained herein is proprietary to Baffinland Iron Mines Corporation and is used solely for the purpose for which it is supplied.
It shall not be disclosed in whole or in part, to any other party, without the express permission in writing by Baffinland Iron Mines Corporation.

Note: This is an UNCONTROLLED COPY. All staff members are responsible to ensure the latest revision is used.

TABLE 6-1 CONTACT LIST FOR MDMER NOTIFICATION OF A RELEASE

Name	Location	Phone Number	Purpose
Environmental Superintendent and Head of Health, Safety, Environment & Security	Mary River Mine site	Tel: (416) 364-8820 ext. 6016	All spills, leaks and releases of hazardous materials will be reported to the Environment Department immediately and documented by submitting the necessary documentation within 4 hours of the spill.
Environment and Climate Change Canada	933 Mivvik Street, Suite 301-Qiliaut Building P.O. Box 1870 Iqaluit, Nunavut X0A 0H0	Tel: (867) 975-4644 Cell: (867) 222-1925 Fax: (867) 975-4594	Any release of a deleterious substance, non-compliant pH, or acute lethality failure will trigger notification.
Crown Indigenous Relations and Northern Affairs Canada	Resource Management Officer, P.O. Box 100, Iqaluit, NU X0A 0H0	Tel: (867) 975-4550	Spills greater than 100 liters require notification to the regulators within 24 hours of the spill.
NT-NU 24-hr Spill Report Line	Iqaluit, NU	Tel: (867) 920-8130	Spills greater than 100 liters or deposit of a deleterious substance as outlined in MDMER Section 34 require notification to the spill line and documentation submitted within 24 hours of the spill.

6.3 ENSURING NO ACCIDENTAL DISCHARGE OF NON-COMPLIANT WATER

6.3.1 PROCEDURE FOR DISCHARGING CONTAINMENT PONDS

All personnel must adhere to the following procedure when planning to discharge from a containment pond. If personnel are unsure of a task at any time, the work must cease, and the worker must contact their supervisor to request further direction.

1. Prior to sampling, the YSI calibration much be checked and the results of this check recorded in the log book.
2. Collect a full-suite of pre-discharge samples from pond if discharge is not immediately required to avoid overflow.
3. If pre-discharge sample results are compliant, notify applicable regulators of planned discharge.
4. The sampling date for the monthly acute lethality sample must be selected and recorded not less than 30 days in advance of collecting the sample.
5. Obtain approval from the Environmental Superintendent or Manager to begin discharging.
6. Prior to pumping, record flow meter totalizer values and the time of pump start-up, in the appropriate log book. This is the standard requirement before any pumping occurs.

   Note: Baffinland is required to report the total volume of effluent discharged daily and monthly from containment ponds as per the Water Licence and the MDMER.

The information contained herein is proprietary to Baffinland Iron Mines Corporation and is used solely for the purpose for which it is supplied.
It shall not be disclosed in whole or in part, to any other party, without the express permission in writing by Baffinland Iron Mines Corporation.

Note: This is an UNCONTROLLED COPY. All staff members are responsible to ensure the latest revision is used.

7. Effluent sampling frequencies must adhere to the MDMER and Water Licence criteria utilizing accredited laboratory analysis, with accompanying field parameters, while discharging.
   a. All discharge samples must be taken from the FDP for the pond.
   b. YSI readings must accompany all samples, and the BIM assigned YSI equipment number must be recorded in the field log.
   c. All acute lethality samples must be collected with a MDMER-FDP sample set.
8. The containment pond must be inspected daily during the discharge period.
9. Ensure the required discharge data and notes are recorded in the appropriate field log daily during the discharge period. All discharge data and notes must be recorded in the field log book designated for the specific pond.
10. After sample collection, the following actions must be completed as soon as possible:
    a. Photographs of discharge activities and scans of field notes must be documented and the discharge log updated.
    b. Samples are to be stored in the lab refrigerator or in a cooler with ice until the samples are shipped to the lab.

6.3.2 ENSURING NO DISCHARGE OF NON-COMPLIANT EFFLUENT

Effluent discharged to the receiving environment from containment ponds must adhere to MDMER and Baffinland's Water License discharge limits (Table 6-2). Historically, the WRF Pond has contained low pH (acidic) water as the result of impacted runoff from the Waste Rock Stockpile. In cases where effluent contained in the WRF Pond or CF Pond is determined to be non-compliant with applicable discharge limits, the effluent must be treated as per Baffinland's Waste Rock Management Plan (BAF-PH1-830-P16-0029) and Waste Pond Water Treatment Plant Operations Procedure (BAF-PH1-340-PRO-048) to ensure compliance with the applicable discharge limits.

It is the responsibility of both the supervisor and the worker to discontinue discharging from the pond(s) and to notify their supervisor immediately, for any of the reasons listed below. A re-evaluation of the effluent quality is required prior to restarting discharge.

Reasons to discontinue discharging:

1. If external lab results for MS-06 (CF Pond) or MS-08 (WRF Pond) effluent are received that exceed the maximum concentrations listed in the 'BIM Internal Limits' column in Table 6-2. These limits are a threshold of conservatism to ensure regulated discharge limits are not exceeded (Table 6-2).
2. If field pH measurements (i.e. YSI) fall outside the allowable range outlined in the 'BIM Internal Limits' column of Table 6-2. These field readings are real-time measurements that characterize the quality of effluent being discharged at that instance. As such, if measured field parameters

The information contained herein is proprietary to Baffinland Iron Mines Corporation and is used solely for the purpose for which it is supplied.
It shall not be disclosed in whole or in part, to any other party, without the express permission in writing by Baffinland Iron Mines Corporation.

Note: This is an UNCONTROLLED COPY. All staff members are responsible to ensure the latest revision is used.

fall outside of the 'BIM Internal Limits' outlined in Table 6-2, the discharge of effluent to the receiving environment must cease and the worker's supervisor must be immediately notified.

3. Pumping must stop for at least 12 hours following heavy precipitation or wind events to allow for the pond effluent to stabilize, any suspended sediments to settle and be re-sampled, unless advised otherwise by the Environmental Superintendent.

TABLE 6-2 BIM STANDARDS FOR EFFLUENT QUALITY DISCHARGE LIMITS FOR MS-06 AND MS-08

Parameter	Maximum Authorized Monthly Mean Concentration, as per MDMER	Maximum Concentration In A Grab Sample, as per BIM Internal Limits
Total Arsenic	0.50 mg/L	0.40 mg/L
Total Copper	0.30 mg/L	0.24 mg/L
Total Lead	0.20 mg/L	0.16 mg/L
Total Nickel	0.50 mg/L	0.40 mg/L
Total Zinc	0.50 mg/L	0.40 mg/L
TSS	15.0 mg/L	15.0 mg/L
Cyanide	1.00 mg/L	N/A
Radium 226	0.37 Bq/L	N/A
pH	Between 6.0 and 9.5	Between 6.5 and 9.0
Acute Lethality	Not acutely toxic (<50% mortality)	Not acutely toxic (<50% mortality)

If non-compliant effluent is accidently discharged to the receiving environment, Operations and Environment Departments will work collaboratively to mitigate, evaluate and document potential effects. In the case of the accidental release of non-compliant effluent, pumping of effluent to the receiving environment must cease immediately and the Manager of Health, Safety, Environment and Security, Mine Manager and the Environmental Superintendent must to be notified immediately. In the event of a release of non-compliant effluent to the receiving environment, all notes, photographs, pumping/discharge times, rates, and totalizer data, and effluent quality data must be compiled for the investigation and the scene of the incident shut down until further instruction.

In the occurrence of an acute lethality test determining the effluent to be acutely lethal, Baffinland will cease discharge immediately. The inspector will be notified of the non-compliance without delay. Effluent quality data collected when the acute lethality sample was collected will be reviewed, and an additional MDMER-FDP and acute lethality sample set will be collected with the discharge pump set in recirculation mode. Additionally, reference and exposure area samples will be collected to monitor any impacts on the receiving environment. The reference area sample site for both ponds is MS-08-US, and the exposure area sample sites are MS-08-DS for the WRF Pond and MS-06-DS for the CF Pond. These requirements are outlined in Section 15 of the MDMER. If discharge is not ceased, increased frequency of acute lethality testing will occur as per Section 15 of the MDMER. In most cases, the pond will be recirculated until effluent quality is confirmed to be compliant before discharge to the receiving environment occurs.

The information contained herein is proprietary to Baffinland Iron Mines Corporation and is used solely for the purpose for which it is supplied.
It shall not be disclosed in whole or in part, to any other party, without the express permission in writing by Baffinland Iron Mines Corporation.

Note: This is an UNCONTROLLED COPY. All staff members are responsible to ensure the latest revision is used.

6.4 TRAINING FOR SPILL RESPONSE

Emergency spill responses often occur in conjunction with other emergency responses (i.e. an overturned fuel tanker on the Tote Road); to facilitate an efficient response to an emergency, personnel trained to respond to health and safety emergencies shall also be trained in spill response. Baffinland's ERT Coordinator, with support from the Environmental Superintendents, will identify training and resource requirements for personnel involved with emergency spill responses. Emergency spill response training required by this Plan shall be reviewed in conjunction with Baffinland's ERP. Emergency and spill response training shall be updated throughout the lifecycle of Project to ensure the following requirements are fulfilled:

- The requirements of NWT/Nunavut Mines Health and Safety Regulations are met or exceeded.
- Emergency responders can competently operate the equipment employed for spill responses and other emergencies.
- Emergency responders will undertake practices, drills, and full scale exercises, for responding to emergencies that are plausible on site.

6.4.1 DRILLS AND EXERCISES

While drills and exercises can be used for training purposes, their primary function for this Plan is to provide the means of testing the adequacy of the Plan's provisions and the level of readiness of response personnel. The Emergency Response Trainer and Environmental Superintendents are responsible for coordinating the development of and assisting in conducting drills and exercises annually. The following section outlines the types of drills and exercises that can be practiced:

6.4.1.1 TABLE TOP EXERCISES

Table top exercises involve presenting a simulated emergency situation to key emergency response personnel in informal settings to elicit constructive discussions as the participants examine and resolve problems based on this Plan. These exercises shall be performed during ERT training sessions conducted throughout the year.

6.4.1.2 FUNCTIONAL DRILLS

Functional drills are practical exercises designed to evaluate the capability of personnel to perform a specific function (i.e. communications, first aid, and spill response). Deficiencies and competencies identified during functional drills are documented as per Section 30(4) of the MDMER, and are used as effective development tools in the preparation of response procedures required for full-scale exercises.

6.4.1.3 FULL-SCALE EXERCISES

Full scale exercises are intended to evaluate the operational capability of Baffinland's emergency response and preparedness. Full-scale exercises require sufficient notice to allow for the preparation of effective

The information contained herein is proprietary to Baffinland Iron Mines Corporation and is used solely for the purpose for which it is supplied.
It shall not be disclosed in whole or in part, to any other party, without the express permission in writing by Baffinland Iron Mines Corporation.

Note: This is an UNCONTROLLED COPY. All staff members are responsible to ensure the latest revision is used.

emergency response procedures and to identify and correct deficiencies in advance. Examples of mock full scale exercises at Baffinland include: non-compliant water discharge, berm breach, controlled discharge, seepage observed, and migratory waterfowl landing in ponds. Deficiencies and competencies identified during full scale exercises are documented as per Section 30(4) of the MDMER, and used as effective development tools in the preparation of response procedures required for full-scale exercises.

The information contained herein is proprietary to Baffinland Iron Mines Corporation and is used solely for the purpose for which it is supplied.
It shall not be disclosed in whole or in part, to any other party, without the express permission in writing by Baffinland Iron Mines Corporation.

Note: This is an UNCONTROLLED COPY. All staff members are responsible to ensure the latest revision is used.

7 REFERENCES AND RECORDS

Baffinland, (2014). EPP: BAF-PH1-840-P16-0002 Emergency Response Plan.

Baffinland, (2014). BAF-PH1-830-P16-0008 Environmental Protection Plan.

Baffinland, BAF-PH1-810-FOR-0005 Incident Investigation Form.

Golder, (2018). Interim Waste Rock Management Plan.

Baffinland, (2017). BAF-PH1-830-P16-0036 Spill Contingency Plan.

Baffinland, (2018). BAF-PH1-340-PRO-048 Waste Pond Water Treatment Plant Operations.

Environment and Climate Change Canada, (2020).

Fisheries Act, (1985). (R.S.C., 1985, c. F-14).

Metal and Diamond Mining Effluent Regulations, (SOR/2002-222).

Migratory Birds Convention Act, (1994). (S.C. 1994, c. 22).

Nunavut Water Board (2013) Water License NO: 2AM–MRY1325 Type “A”.

The information contained herein is proprietary to Baffinland Iron Mines Corporation and is used solely for the purpose for which it is supplied.
It shall not be disclosed in whole or in part, to any other party, without the express permission in writing by Baffinland Iron Mines Corporation.

Note: This is an UNCONTROLLED COPY. All staff members are responsible to ensure the latest revision is used.

APPENDICES

The information contained herein is proprietary to Baffinland Iron Mines Corporation and is used solely for the purpose for which it is supplied.
It shall not be disclosed in whole or in part, to any other party, without the express permission in writing by Baffinland Iron Mines Corporation.

Note: This is an UNCONTROLLED COPY. All staff members are responsible to ensure the latest revision is used.

APPENDIX A SITE LAYOUT AND WATER LICENCE/ MDMER MONITORING LOCATIONS

The information contained herein is proprietary to Baffinland Iron Mines Corporation and is used solely for the purpose for which it is supplied.
It shall not be disclosed in whole or in part, to any other party, without the express permission in writing by Baffinland Iron Mines Corporation.

Note: This is an UNCONTROLLED COPY. All staff members are responsible to ensure the latest revision is used.

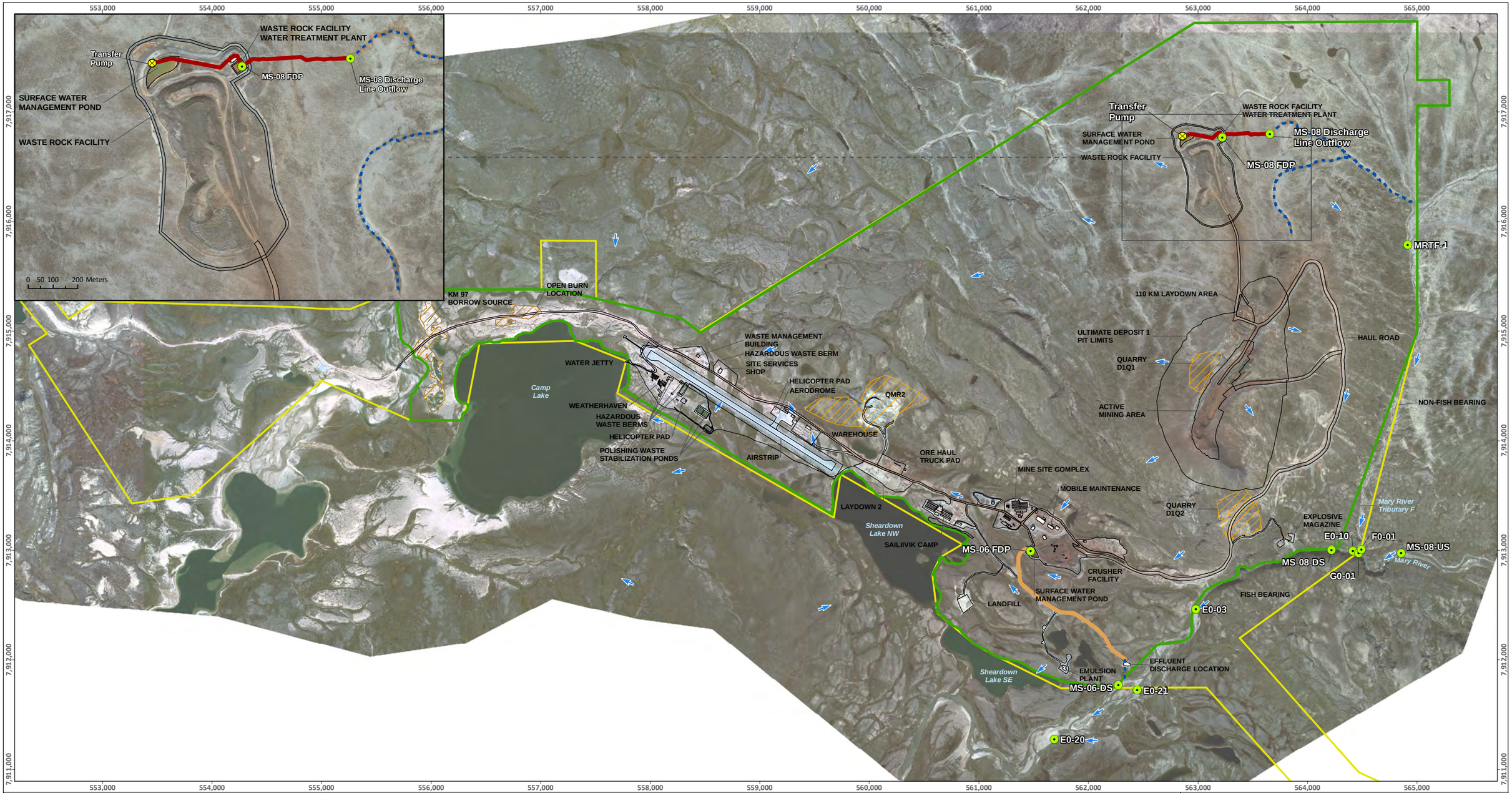

LEGEND

- Borrow Area
- Quarry Area
- Project Development Area
- Commercial Lease Boundary
- Current Infrastructure
- Lay Flat Hose
- HDPE Pipe
- Overland Surface Water Flow
- Drainage Direction
- Monitoring
- Pump

MARY RIVER PROJECT

Mine Site Layout and MDMER Water Licence Monitoring Locations

Projection: NAD 1983 UTM ZONE 17N.
Base Map: © 2019 Digital Global, Inc.
Imagery and Infrastructure are representative as of August 2019.

0 115 230 460 690 920 Meters
Scale 1:34,000

N

Baffinland

ᑎᑎᕋᐅᔭᕐᓯᒪᔪᖅ
FIGURE 1

SAVED: C:\Users\katie.mcguire\Documents\4 - Maps\Reporting\1_Annual\MDMER\BIM_Fig 1 MineSite MDMER.mxd; 29-Mar-20

APPENDIX B METAL AND DIAMOND MINING EFFLUENT REGULATIONS

The information contained herein is proprietary to Baffinland Iron Mines Corporation and is used solely for the purpose for which it is supplied.
It shall not be disclosed in whole or in part, to any other party, without the express permission in writing by Baffinland Iron Mines Corporation.

Note: This is an UNCONTROLLED COPY. All staff members are responsible to ensure the latest revision is used.

CANADA

CONSOLIDATION

CODIFICATION

Metal and Diamond Mining Effluent Regulations

Règlement sur les effluents des mines de métaux et des mines de diamants

SOR/2002-222

DORS/2002-222

Current to December 2, 2020

Last amended on June 18, 2020

À jour au 2 décembre 2020

Dernière modification le 18 juin 2020

Published by the Minister of Justice at the following address:
http://laws-lois.justice.gc.ca

Publié par le ministre de la Justice à l'adresse suivante :
http://lois-laws.justice.gc.ca

OFFICIAL STATUS OF CONSOLIDATIONS

Subsections 31(1) and (3) of the *Legislation Revision and Consolidation Act*, in force on June 1, 2009, provide as follows:

Published consolidation is evidence

31 (1) Every copy of a consolidated statute or consolidated regulation published by the Minister under this Act in either print or electronic form is evidence of that statute or regulation and of its contents and every copy purporting to be published by the Minister is deemed to be so published, unless the contrary is shown.

...

Inconsistencies in regulations

(3) In the event of an inconsistency between a consolidated regulation published by the Minister under this Act and the original regulation or a subsequent amendment as registered by the Clerk of the Privy Council under the *Statutory Instruments Act*, the original regulation or amendment prevails to the extent of the inconsistency.

CARACTÈRE OFFICIEL DES CODIFICATIONS

Les paragraphes 31(1) et (3) de la *Loi sur la révision et la codification des textes législatifs*, en vigueur le 1er juin 2009, prévoient ce qui suit :

Codifications comme élément de preuve

31 (1) Tout exemplaire d'une loi codifiée ou d'un règlement codifié, publié par le ministre en vertu de la présente loi sur support papier ou sur support électronique, fait foi de cette loi ou de ce règlement et de son contenu. Tout exemplaire donné comme publié par le ministre est réputé avoir été ainsi publié, sauf preuve contraire.

[...]

Incompatibilité — règlements

(3) Les dispositions du règlement d'origine avec ses modifications subséquentes enregistrées par le greffier du Conseil privé en vertu de la *Loi sur les textes réglementaires* l'emportent sur les dispositions incompatibles du règlement codifié publié par le ministre en vertu de la présente loi.

LAYOUT

The notes that appeared in the left or right margins are now in boldface text directly above the provisions to which they relate. They form no part of the enactment, but are inserted for convenience of reference only.

MISE EN PAGE

Les notes apparaissant auparavant dans les marges de droite ou de gauche se retrouvent maintenant en caractères gras juste au-dessus de la disposition à laquelle elles se rattachent. Elles ne font pas partie du texte, n'y figurant qu'à titre de repère ou d'information.

NOTE

This consolidation is current to December 2, 2020. The last amendments came into force on June 18, 2020. Any amendments that were not in force as of December 2, 2020 are set out at the end of this document under the heading "Amendments Not in Force".

NOTE

Cette codification est à jour au 2 décembre 2020. Les dernières modifications sont entrées en vigueur le 18 juin 2020. Toutes modifications qui n'étaient pas en vigueur au 2 décembre 2020 sont énoncées à la fin de ce document sous le titre « Modifications non en vigueur ».

TABLE OF PROVISIONS

Metal and Diamond Mining Effluent Regulations

1 **PART 1**

General

1 Interpretation

2 Application

3 Prescribed Deleterious Substances

4 Authority to Deposit in Water or Place Referred to in Subsection 36(3) of Act

5 Authority to Deposit in Tailings Impoundment Areas

6 **PART 2**

Conditions Governing Authority to Deposit

6 **DIVISION 1**

General

6 Prohibition on Diluting Effluent

7 Environmental Effects Monitoring

8 Identifying Information

9 Final Discharge Points

11 Monitoring Equipment Information

12 **DIVISION 2**

Effluent Monitoring Conditions

12 Deleterious Substance and pH Testing

14 Acute Lethality Testing

14 General

TABLE ANALYTIQUE

Règlement sur les effluents des mines de métaux et des mines de diamants

1 **PARTIE I**

Dispositions générales

1 Définitions et interprétation

2 Champ d'application

3 Substances nocives désignées

4 Rejet autorisé dans les eaux ou lieux visés au paragraphe 36(3) de la Loi

5 Autorisation de rejeter dans un dépôt de résidus miniers

6 **PARTIE 2**

Conditions régissant l'autorisation de rejeter

6 **SECTION 1**

Dispositions générales

6 Interdiction de diluer

7 Études de suivi des effets sur l'environnement

8 Renseignements d'identification

9 Points de rejet final

11 Renseignements sur l'équipement de surveillance

12 **SECTION 2**

Conditions portant sur le suivi de l'effluent

12 Essais concernant le pH et les substances nocives

14 Essai de détermination de la létalité aiguë

14 Généralités

14.1 Acute Lethality Test — Rainbow Trout

14.2 Acute Lethality Test — Threespine Stickleback

15 Increased Frequency of Acute Lethality Testing

16 Reduced Frequency of Acute Lethality Testing

17 Daphnia magna Monitoring Tests

18 Obligation to Record All Test Results

19 Volume of Effluent

19.1 Calculation of Monthly Mean Concentration and Loading

21 Reporting Monitoring Results

25 Relief

26 **DIVISION 3**

Notice, Records and Other Documents

26 End of Commercial Operation Notice

27 Records, Books of Account or Other Documents

27.1 **DIVISION 4**

Tailings Impoundment Areas

27.1 Compensation Plan

28 Deposits from Tailings Impoundment Areas

29 **PART 3**

Unauthorized Deposits

30 Emergency Response Plan

31 Reporting

31.1 Acute Lethality Testing

32 **PART 4**

Recognized Closed Mines

32 Requirements

14.1 Essai de détermination de la létalité aiguë — Truite arc-en-ciel

14.2 Essai de détermination de la létalité aiguë — Épinoche à trois épines

15 Fréquence accrue des essais de détermination de la létalité aiguë

16 Fréquence réduite des essais de détermination de la létalité aiguë

17 Essai de suivi avec bioessais sur la Daphnia magna

18 Enregistrement des renseignements

19 Volume d'effluent

19.1 Calcul de la concentration moyenne mensuelle et de la charge

21 Rapports sur les résultats de suivi

25 Dispense

26 **SECTION 3**

Avis, registres et autres documents

26 Avis de la fin de l'exploitation commerciale

27 Registres, livres comptables ou autres documents

27.1 **SECTION 4**

Dépôts de résidus miniers

27.1 Plan compensatoire

28 Rejets à partir de dépôts de résidus miniers

29 **PARTIE 3**

Rejets non autorisés

30 Plan d'intervention d'urgence

31 Rapport

31.1 Essai de détermination de la létalité aiguë

32 **PARTIE 4**

Mines fermées reconnues

32 Exigences

33 Identifying Information

SCHEDULE 1

SCHEDULE 2

SCHEDULE 3

Analytical Requirements for Metal or Diamond Mining Effluent

SCHEDULE 4

SCHEDULE 5

Environmental Effects Monitoring Studies

SCHEDULE 6

Annual Report Summarizing Effluent Monitoring Results

SCHEDULE 6.1

SCHEDULE 7

SCHEDULE 8

33 Renseignements d'identification

ANNEXE 1

ANNEXE 2

ANNEXE 3

Exigences analytiques pour les effluents des mines de métaux et des mines de diamants

ANNEXE 4

ANNEXE 5

Études de suivi des effets sur l'environnement

ANNEXE 6

Rapport annuel résumant les résultats du suivi de l'effluent

ANNEXE 6.1

ANNEXE 7

ANNEXE 8

Registration
SOR/2002-222 June 6, 2002

FISHERIES ACT

Metal and Diamond Mining Effluent Regulations

P.C. 2002-987 June 6, 2002

Her Excellency the Governor General in Council, on the recommendation of the Minister of Fisheries and Oceans, pursuant to subsections 34(2), 36(5) and 38(9) of the *Fisheries Act*, hereby makes the annexed *Metal Mining Effluent Regulations*.

Enregistrement
DORS/2002-222 Le 6 juin 2002

LOI SUR LES PÊCHES

Règlement sur les effluents des mines de métaux et des mines de diamants

C.P. 2002-987 Le 6 juin 2002

Sur recommandation du ministre des Pêches et des Océans et en vertu des paragraphes 34(2), 36(5) et 38(9) de la *Loi sur les pêches*, Son Excellence la Gouverneure générale en conseil prend le *Règlement sur les effluents des mines de métaux*, ci-après.

Metal and Diamond Mining Effluent Regulations

Règlement sur les effluents des mines de métaux et des mines de diamants

PART 1

General

Interpretation

1 (1) The following definitions apply in these Regulations.

Act means the *Fisheries Act*. (*Loi*)

acute lethality test [Repealed, SOR/2018-99, s. 2]

acutely lethal, in respect of an effluent, means that the effluent at 100% concentration kills

(a) more than 50% of the rainbow trout subjected to it for a period of 96 hours, when tested in accordance with the acute lethality test set out in section 14.1; or

(b) more than 50% of the threespine stickleback subjected to it for a period of 96 hours, when tested in accordance with the acute lethality test set out in section 14.2. (*létalité aiguë*)

acutely lethal effluent [Repealed, SOR/2018-99, s. 2]

authorization officer [Repealed, SOR/2018-99, s. 2]

commercial operation, in respect of a mine, means an average rate of production equal to or greater than 10% of the design-rated capacity of the mine over a period of 90 consecutive days. (*exploitation commerciale*)

composite sample means

(a) a quantity of effluent consisting of not less than three equal volumes or three volumes proportionate to flow that have been collected at approximately equal time intervals over a sampling period of not less than seven hours and not more than 24 hours; or

(b) a quantity of effluent collected continuously at a constant rate or at a rate proportionate to the rate of flow of the effluent over a sampling period of not less than seven hours and not more than 24 hours. (*échantillon composite*)

PARTIE I

Dispositions générales

Définitions et interprétation

1 (1) Les définitions qui suivent s'appliquent au présent règlement.

agent d'autorisation [Abrogée, DORS/2018-99, art. 2]

autorisation transitoire [Abrogée, DORS/2018-99, art. 2]

chantier [Abrogée, DORS/2018-99, art. 2]

concentration moyenne mensuelle La valeur moyenne des concentrations mesurées dans les échantillons composites ou instantanés prélevés de chaque point de rejet final chaque mois où il y a rejet de substances nocives. (*monthly mean concentration*)

dépôt de résidus miniers [Abrogée, DORS/2006-239, art. 1]

eau de drainage superficiel [Abrogée, DORS/2018-99, art. 2]

échantillon composite

a) Soit le volume d'effluent composé d'au moins trois parties égales ou de trois parties proportionnelles au débit, prélevées à intervalles sensiblement égaux, pendant une période d'échantillonnage d'au moins sept heures et d'au plus vingt-quatre heures;

b) soit le volume d'effluent prélevé de façon continue à un débit constant ou à un débit proportionnel à celui de l'effluent, pendant une période d'échantillonnage d'au moins sept heures et d'au plus vingt-quatre heures. (*composite sample*)

échantillon instantané [Abrogée, DORS/2018-99, art. 2]

effluent S'entend, selon le cas :

a) de l'effluent de bassins de traitement, de l'effluent d'eau de mine, de l'effluent des dépôts de résidus miniers, de l'effluent d'installations de préparation du

Daphnia magna monitoring test [Repealed, SOR/2018-99, s. 2]

deleterious substance [Repealed, SOR/2018-99, s. 2]

diamond mine means any work or undertaking that is designed or is used, or has been used, in connection with a mining or milling activity to produce a diamond or an ore from which a diamond may be produced. It includes any cleared or disturbed area that is adjacent to such a work or undertaking. (*mine de diamants*)

effluent means any of the following:

(a) hydrometallurgical facility effluent, milling facility effluent, mine water effluent, tailings impoundment area effluent, treatment pond effluent or treatment facility effluent other than effluent from a sewage treatment facility; or

(b) any seepage or surface runoff containing any deleterious substance that flows over, through or out of the site of a mine. (*effluent*)

final discharge point, in respect of an effluent, means an identifiable discharge point of a mine beyond which the operator of the mine no longer exercises control over the quality of the effluent. (*point de rejet final*)

grab sample [Repealed, SOR/2018-99, s. 2]

hydrometallurgical facility effluent means effluent from the acidic leaching, solution concentration and recovery of metals by means of aqueous chemical methods, tailings slurries, and all other effluents deposited from a hydrometallurgical facility. (*effluent d'installations d'hydrométallurgie*)

hydrometallurgy means the production of a metal by means of aqueous chemical methods for acidic leaching, solution concentration and recovery of metals from metal-bearing minerals other than metal-bearing minerals that have been thermally pre-treated or blended with metal-bearing minerals that have been thermally pre-treated. (*hydrométallurgie*)

metal mine means any work or undertaking that is designed or is used, or has been used, in connection with a mining, milling or hydrometallurgical activity to produce a metal or a metal concentrate or an ore from which a metal or a metal concentrate may be produced, as well as any cleared or disturbed area that is adjacent to such a work or undertaking. It includes any work or undertaking, such as a smelter, pelletizing plant, sintering plant, refinery or acid plant, if its effluent is combined with the effluent from a mining, milling or hydrometallurgical minerai, de l'effluent d'installations d'hydrométallurgie ou de l'effluent d'installations de traitement à l'exclusion de l'effluent d'installations de traitement d'eaux résiduaires;

b) des eaux d'exfiltration et des eaux de ruissellement qui contiennent une substance nocive et qui coulent sur le site d'une mine ou en proviennent. (*effluent*)

effluent à létalité aiguë [Abrogée, DORS/2018-99, art. 2]

effluent d'eau de mine Dans le cadre d'activités minières, l'eau pompée d'ouvrages souterrains, de compartiments d'extraction par solution ou de mines à ciel ouvert ou l'eau s'écoulant de ceux-ci. (*mine water effluent*)

effluent d'installations de préparation du minerai Boues de stériles, effluent des lixiviats de terrils, effluent de l'extraction par solution et tout autre effluent rejeté à partir d'une installation de préparation du minerai. (*milling facility effluent*)

effluent d'installations de traitement Eau des bassins de polissage, des bassins de traitement, des bassins de décantation, des stations de traitement de l'eau et de toute installation de traitement des effluents miniers. (*treatment facility effluent*)

effluent d'installations d'hydrométallurgie Effluent rejeté à partir d'une installation d'hydrométallurgie, notamment effluent de lixiviation acide, de concentration de solution et de récupération de métal par procédés chimiques aqueux et boues de résidus miniers. (*hydrometallurgical facility effluent*)

essai de détermination de la létalité aiguë [Abrogée, DORS/2018-99, art. 2]

essai de suivi avec bioessais sur la Daphnia magna [Abrogée, DORS/2018-99, art. 2]

exploitant Personne qui exploite une mine, qui en a le contrôle ou la garde, ou qui en est responsable. (*operator*)

exploitation commerciale Le taux de production moyen d'une mine qui, au cours d'une période de quatre-vingt-dix jours consécutifs, est égal ou supérieur à 10 % de la capacité nominale de la mine. (*commercial operation*)

exploitation des placers Exploitation minière où le minerai ou les métaux sont extraits de sédiments de cours

activity whose purpose is to produce a metal or a metal concentrate or an ore from which a metal or a metal concentrate may be produced. (*mine de métaux*)

milling means any of the following activities for the purpose of producing a diamond, metal or metal concentrate:

(a) the crushing or grinding of ore or kimberlite;

(b) the processing of uranium ore or uranium enriched solution; or

(c) the processing of tailings. (*préparation du minerai*)

milling facility effluent means tailing slurries, heap leaching effluent, solution mining effluent and all other effluent deposited from a milling facility. (*effluent d'installations de préparation du minerai*)

mine [Repealed, SOR/2018-99, s. 2]

mine under development [Repealed, SOR/2018-99, s. 2]

mine water effluent means, in respect of mining activities, water that is pumped from or flows out of any underground works, solution chambers or open pits. (*effluent d'eau de mine*)

monthly mean concentration means the average value of the concentrations measured in all composite or grab samples collected from each final discharge point during each month when a deleterious substance is deposited. (*concentration moyenne mensuelle*)

new mine [Repealed, SOR/2018-99, s. 2]

operations area [Repealed, SOR/2018-99, s. 2]

operator means any person who operates, has control or custody of or is in charge of a mine. (*exploitant*)

placer mining means a mining operation that extracts minerals or metals from stream sediments by gravity or magnetic separation. (*exploitation des placers*)

recognized closed mine [Repealed, SOR/2018-99, s. 2]

Reference Method EPS 1/RM/10 means *Biological Test Method: Reference Method for Determining Acute Lethality Using Threespine Stickleback*, published in December 2017 by the Department of the Environment, as amended from time to time. (*méthode de référence SPE 1/RM/10*)

d'eau par gravité ou par séparation magnétique. (*placer mining*)

hydrométallurgie La production d'un métal par des procédés chimiques aqueux de lixiviation acide, concentration de solution et récupération de métal à partir de minéraux métallifères n'ayant pas subi de prétraitement thermique ou n'ayant pas été mélangés à des minéraux métallifères qui ont subi un prétraitement thermique. (*hydrometallurgy*)

létalité aiguë S'agissant d'un effluent à l'état non dilué, la capacité de provoquer, selon le cas, la mort de :

a) plus de 50 % des truites arc-en-ciel qui y sont exposées pendant une période de quatre-vingt-seize heures au cours de l'essai de détermination de la létalité aiguë visé à l'article 14.1;

b) plus de 50 % des épinoches à trois épines qui y sont exposés pendant une période de quatre-vingt-seize heures au cours de l'essai de détermination de la létalité aiguë visé à l'article 14.2. (*acutely lethal*)

Loi La *Loi sur les pêches*. (*Act*)

matières en suspension Toutes matières solides présentes dans un effluent et retenues sur un papier-filtre dont les pores mesurent 1,5 micron lorsque l'effluent est soumis à un essai conforme aux exigences analytiques prévues au tableau 1 de l'annexe 3. (*suspended solids*)

méthode de référence SPE 1/RM/10 La publication intitulée *Méthode d'essai biologique : méthode de référence pour la détermination de la létalité aiguë à l'aide de l'épinoche à trois épines*, publiée en décembre 2017 par le ministère de l'Environnement, avec ses modifications successives. (*Reference Method EPS 1/RM/10*)

méthode de référence SPE 1/RM/13 La publication intitulée *Méthode d'essai biologique : méthode de référence pour la détermination de la létalité aiguë d'effluents chez la truite arc-en-ciel* (Méthode de référence SPE 1/RM/13), publiée en juillet 1990 par le ministère de l'Environnement, dans sa version modifiée en décembre 2000 et avec ses modifications successives. (*Reference Method EPS 1/RM/13*)

méthode de référence SPE 1/RM/14 La publication intitulée *Méthode d'essai biologique : méthode de référence pour la détermination de la létalité aiguë d'effluents chez Daphnia magna* (Méthode de référence SPE 1/RM/14), publiée en juillet 1990 par le ministère de l'Environnement, dans sa version modifiée en décembre 2000 et avec ses modifications successives. (*Reference Method EPS 1/RM/14*)

Reference Method EPS 1/RM/13 means *Biological Test Method: Reference Method for Determining Acute Lethality of Effluents to Rainbow Trout* (Reference Method EPS 1/RM/13), July 1990, published by the Department of the Environment, as amended in December 2000, and as may be further amended from time to time. (*méthode de référence SPE 1/RM/13*)

Reference Method EPS 1/RM/14 means *Biological Test Method: Reference Method for Determining Acute Lethality of Effluents to Daphnia magna* (Reference Method EPS 1/RM/14), July 1990, published by the Department of the Environment, as amended in December 2000, and as may be further amended from time to time. (*méthode de référence SPE 1/RM/14*)

reopened mine [Repealed, SOR/2018-99, s. 2]

surface drainage [Repealed, SOR/2018-99, s. 2]

suspended solids means any solid matter contained in an effluent that is retained on a 1.5 micron pore filter paper when the effluent is tested in compliance with the analytical requirements set out in Table 1 of Schedule 3. (*matières en suspension*)

tailings impoundment area [Repealed, SOR/2006-239, s. 1]

total suspended solids [Repealed, SOR/2018-99, s. 2]

transitional authorization [Repealed, SOR/2018-99, s. 2]

treatment facility effluent means water from a polishing pond, treatment pond, settling pond or water treatment plant or from any mine effluent treatment facility. (*effluent d'installations de traitement*)

mine [Abrogée, DORS/2018-99, art. 2]

mine de diamants Ouvrage ou entreprise qui est conçu ou qui est ou a été utilisé dans le cadre d'activités d'extraction ou de préparation du minerai visant à produire un diamant ou un minerai à partir duquel un diamant peut être produit ainsi que toute zone déboisée ou perturbée qui y est adjacente. (*diamond mine*)

mine de métaux Ouvrage ou entreprise qui est conçu ou qui est ou a été utilisé dans le cadre d'activités d'extraction, d'hydrométallurgie ou de préparation du minerai visant à produire un métal, un concentré de métal ou un minerai à partir duquel un métal ou un concentré de métal peut être produit ainsi que toute zone déboisée ou perturbée qui y est adjacente. La présente définition comprend tout ouvrage ou entreprise, telles les fonderies, usines de bouletage, usines de frittage, affineries et usines d'acide, dont l'effluent est combiné aux effluents provenant d'activités d'extraction, d'hydrométallurgie ou de préparation du minerai visant à produire un métal, un concentré de métal ou un minerai à partir duquel un métal ou un concentré de métal peut être produit. (*metal mine*)

mine en développement [Abrogée, DORS/2018-99, art. 2]

mine fermée reconnue [Abrogée, DORS/2018-99, art. 2]

mine remise en exploitation [Abrogée, DORS/2018-99, art. 2]

nouvelle mine [Abrogée, DORS/2018-99, art. 2]

point de rejet final Le point de rejet de l'effluent d'une mine qui est repérable et au-delà duquel l'exploitant de la mine n'agit plus quant à la qualité de l'effluent. (*final discharge point*)

préparation du minerai S'entend des activités ci-après effectuées en vue de la production d'un diamant, d'un métal ou d'un concentré de métal :

a) le concassage ou le broyage d'un minerai ou de kimberlite;

b) le traitement du minerai d'uranium ou de solutions uranifères;

c) le traitement de résidus miniers. (*milling*)

rejet Est assimilée au rejet l'immersion au sens du paragraphe 34(1) de la Loi. (*French version only*)

substance nocive [Abrogée, DORS/2018-99, art. 2]

total des solides en suspension [Abrogée, DORS/2018-99, art. 2]

(2) [Repealed, SOR/2018-99, s. 2]

SOR/2006-239, s. 1; SOR/2009-156, s. 1; SOR/2012-22, s. 1; SOR/2018-99, s. 2.

(2) [Abrogé, DORS/2018-99, art. 2]

DORS/2006-239, art. 1; DORS/2009-156, art. 1; DORS/2012-22, art. 1; DORS/2018-99, art. 2.

Application

2 (1) These Regulations apply in respect of the following mines:

(a) metal mines that, at any time on or after June 6, 2002,

(i) exceed an effluent flow rate of 50 m^3 per day, based on the effluent deposited from all the final discharge points of the mine, and

(ii) deposit a deleterious substance in any water or place referred to in subsection 36(3) of the Act; and

(b) diamond mines that, at any time on or after June 1, 2018,

(i) exceed an effluent flow rate of 50 m^3 per day, based on the effluent deposited from all the final discharge points of the mine, and

(ii) deposit a deleterious substance in any water or place referred to in subsection 36(3) of the Act.

(2) However, these Regulations do not apply in respect of

(a) placer mining;

(b) a metal mine that stopped commercial operation before June 6, 2002, unless it returns to commercial operation on or after that date; and

(c) a diamond mine that stopped commercial operation before June 1, 2018, unless it returns to commercial operation on or after that date.

(3) Despite subsection (1), sections 4 to 31 do not apply in respect of a mine that is a recognized closed mine under subsection 32(2) unless it returns to commercial operation, in which case it ceases to be a recognized closed mine.

SOR/2012-22, s. 2; SOR/2018-99, s. 3.

Champ d'application

2 (1) Le présent règlement s'applique à l'égard des mines suivantes :

a) les mines de métaux qui, à un moment quelconque, le 6 juin 2002 ou après cette date :

(i) d'une part, ont un débit d'effluent supérieur à 50 m^3 par jour, déterminé d'après les rejets d'effluent à partir de tous leurs points de rejet final,

(ii) d'autre part, rejettent une substance nocive dans les eaux ou les lieux visés au paragraphe 36(3) de la Loi;

b) les mines de diamants qui, à un moment quelconque, le 1er juin 2018 ou après cette date :

(i) d'une part, ont un débit d'effluent supérieur à 50 m^3 par jour, déterminé d'après les rejets d'effluent à partir de tous leurs points de rejet final,

(ii) d'autre part, rejettent une substance nocive dans les eaux ou les lieux visés au paragraphe 36(3) de la Loi.

(2) Toutefois, le présent règlement ne s'applique pas à l'égard :

a) des exploitations des placers;

b) des mines de métaux dont l'exploitation commerciale a pris fin avant le 6 juin 2002, à moins que l'exploitation commerciale ne reprenne le 6 juin 2002 ou après cette date;

c) des mines de diamants dont l'exploitation commerciale a pris fin avant le 1er juin 2018, à moins que l'exploitation commerciale ne reprenne le 1er juin 2018 ou après cette date.

(3) Malgré le paragraphe (1), les articles 4 à 31 ne s'appliquent pas à l'égard d'une mine qui est une mine fermée reconnue en application du paragraphe 32(2), à moins que l'exploitation commerciale ne reprenne, auquel cas elle cesse d'être une mine fermée reconnue.

DORS/2012-22, art. 2; DORS/2018-99, art. 3.

Prescribed Deleterious Substances

3 For the purpose of the definition *deleterious substance* in subsection 34(1) of the Act, the following substances or classes of substances are prescribed as deleterious substances:

(a) arsenic;

(b) copper;

(c) cyanide;

(d) lead;

(e) nickel;

(f) zinc;

(g) suspended solids; and

(h) radium 226.

SOR/2018-99, s. 3.

Substances nocives désignées

3 Pour l'application de la définition de *substance nocive* au paragraphe 34(1) de la Loi, sont désignées comme substances nocives et les substances ou les catégories de substance suivantes :

a) l'arsenic;

b) le cuivre;

c) le cyanure;

d) le plomb;

e) le nickel;

f) le zinc;

g) les matières en suspension;

h) le radium 226.

DORS/2018-99, art. 3.

Authority to Deposit in Water or Place Referred to in Subsection 36(3) of Act

4 (1) For the purposes of paragraph 36(4)(b) of the Act, the owner or operator of a mine is authorized to deposit, or to permit the deposit of, an effluent containing any deleterious substance that is prescribed in section 3 in any water or place referred to in subsection 36(3) of the Act if

(a) the concentration of the deleterious substance in the effluent does not exceed the maximum authorized concentrations that are set out in columns 2, 3 and 4 of Schedule 4;

(b) the pH of the effluent is equal to or greater than 6.0 but is not greater than 9.5; and

(c) the effluent is not acutely lethal.

(2) The authority in subsection (1) is conditional on the owner or operator complying with sections 6 to 27.

SOR/2018-99, s. 3.

Rejet autorisé dans les eaux ou lieux visés au paragraphe 36(3) de la Loi

4 (1) Pour l'application de l'alinéa 36(4)b) de la Loi, le propriétaire ou l'exploitant d'une mine est autorisé à rejeter ou à permettre que soit rejeté un effluent contenant l'une ou l'autre des substances nocives désignées à l'article 3 dans les eaux ou les lieux visés au paragraphe 36(3) de la Loi, si les conditions suivantes sont réunies :

a) la concentration de la substance nocive dans l'effluent ne dépasse pas les concentrations maximales permises qui sont établies aux colonnes 2, 3 et 4 de l'annexe 4;

b) le pH de l'effluent est égal ou supérieur à 6,0 mais ne dépasse pas 9,5;

c) l'effluent ne présente pas de létalité aiguë.

(2) Le propriétaire ou l'exploitant d'une mine ne peut se prévaloir de l'autorisation que lui confère le paragraphe (1) que s'il respecte les conditions prévues aux articles 6 à 27.

DORS/2018-99, art. 3.

Authority to Deposit in Tailings Impoundment Areas

5 (1) Despite section 4, the owner or operator of a mine may deposit or permit the deposit of waste rock, acutely

Autorisation de rejeter dans un dépôt de résidus miniers

5 (1) Malgré l'article 4, le propriétaire ou l'exploitant d'une mine peut rejeter — ou permettre que soient

lethal effluent or effluent of any pH and containing any concentration of a deleterious substance that is prescribed in section 3 into a tailings impoundment area that is either

(a) a water or place set out in Schedule 2; or

(b) a disposal area that is confined by anthropogenic or natural structures or by both, other than a disposal area that is, or is part of, a natural water body that is frequented by fish.

(2) The authority in subsection (1) is conditional on the owner or operator complying with sections 7 to 28.

(3) For the purposes of this section, any acutely lethal effluent is prescribed as a deleterious substance.

SOR/2006-239, s. 2; SOR/2018-99, s. 5.

rejetés — des stériles, un effluent à létalité aiguë ou tout autre effluent, quel que soit le pH de l'effluent ou sa concentration en substances nocives désignées à l'article 3, dans l'un ou l'autre des dépôts de résidus miniers suivants :

a) les eaux et lieux mentionnés à l'annexe 2;

b) toute aire de décharge circonscrite par une formation naturelle ou un ouvrage artificiel, ou les deux, à l'exclusion d'une aire de décharge qui est un plan d'eau naturel où vivent des poissons ou qui en fait partie.

(2) Le propriétaire ou l'exploitant d'une mine ne peut se prévaloir de l'autorisation que lui confère le paragraphe (1) que s'il respecte les conditions prévues aux articles 7 à 28.

(3) Pour l'application du présent article, tout effluent à létalité aiguë est désigné comme une substance nocive.

DORS/2006-239, art. 2; DORS/2018-99, art. 5.

PART 2

Conditions Governing Authority to Deposit

DIVISION 1

General

Prohibition on Diluting Effluent

6 The owner or operator of a mine shall not combine effluent with water or any other effluent for the purpose of diluting effluent before it is deposited.

Environmental Effects Monitoring

7 (1) The owner or operator of a mine shall conduct environmental effects monitoring studies in accordance with the requirements and within the periods set out in Schedule 5.

(2) The studies shall be conducted using documented and validated methods, and their results interpreted and reported on in accordance with generally accepted standards of good scientific practice at the time that the studies are conducted.

PARTIE 2

Conditions régissant l'autorisation de rejeter

SECTION 1

Dispositions générales

Interdiction de diluer

6 Il est interdit au propriétaire ou à l'exploitant d'une mine de combiner un effluent avec de l'eau ou avec tout autre effluent dans le but de le diluer avant son rejet.

Études de suivi des effets sur l'environnement

7 (1) Le propriétaire ou l'exploitant d'une mine effectue des études de suivi des effets sur l'environnement selon les exigences et dans les délais prévus à l'annexe 5.

(2) Il effectue les études selon des méthodes éprouvées et validées et évalue et présente leurs résultats conformément aux normes généralement reconnues régissant les bonnes pratiques scientifiques au moment de l'étude.

(3) The owner or operator shall record the results of the studies and submit to the Minister of the Environment, in accordance with the requirements set out in Schedule 5, the reports and information required by that Schedule.

SOR/2006-239, s. 3; SOR/2018-99, s. 6.

(3) Il enregistre les résultats des études et présente au ministre de l'Environnement, selon les exigences prévues à l'annexe 5, les rapports et les renseignements visés à cette annexe.

DORS/2006-239, art. 3; DORS/2018-99, art. 6.

Identifying Information

8 (1) The owner or operator of a mine shall submit in writing to the Minister of the Environment the information referred to in subsection (2) not later than 60 days after the day on which any of the following occur:

(a) the mine becomes subject to these Regulations;

(b) ownership of the mine is transferred; and

(c) the mine returns to commercial operation after it has become a recognized closed mine.

(2) The information that shall be submitted is

(a) the name and address of both the owner and the operator of the mine;

(b) the name and address of any parent company of the owner and the operator; and

(c) the design-rated capacity of the mine, expressed as tonnes per year, and a description and rationale of how the design-rated capacity was determined.

(3) The owner or operator shall submit in writing to the Minister of the Environment any change in the information not later than 60 days after the change occurs.

SOR/2018-99, ss. 7, 36.

Renseignements d'identification

8 (1) Le propriétaire ou l'exploitant d'une mine présente par écrit au ministre de l'Environnement les renseignements mentionnés au paragraphe (2) :

a) dans les soixante jours suivant la date à laquelle la mine devient assujettie au présent règlement;

b) dans les soixante jours suivant le transfert de la propriété de la mine;

c) s'agissant d'une mine fermée reconnue, dans les soixante jours suivant la date à laquelle l'exploitation commerciale reprend.

(2) Les renseignements à présenter sont :

a) les nom et adresse du propriétaire et de l'exploitant;

b) les nom et adresse de toute société mère du propriétaire et de l'exploitant;

c) la capacité nominale de la mine, exprimée en tonne par année, ainsi qu'une description et une explication de la façon dont elle a été établie.

(3) Le propriétaire ou l'exploitant présente par écrit au ministre de l'Environnement des précisions sur tout changement des renseignements dans les soixante jours suivant le changement.

DORS/2018-99, art. 7 et 36.

Final Discharge Points

9 The owner or operator of a mine shall identify each final discharge point and submit in writing to the Minister of the Environment, not later than 60 days after the day on which the mine becomes subject to these Regulations, the following information:

(a) plans, specifications and a general description of each final discharge point together with its location by latitude and longitude;

(b) a description of how each final discharge point is designed and maintained in respect of the deposit of deleterious substances; and

Points de rejet final

9 Le propriétaire ou l'exploitant d'une mine détermine chaque point de rejet final et fournit par écrit au ministre de l'Environnement, dans les soixante jours suivant la date à laquelle la mine devient assujettie au présent règlement, les renseignements suivants :

a) les plans, les spécifications et une description générale de chaque point de rejet final, ainsi que la latitude et la longitude de son emplacement;

b) la façon dont chacun des points de rejet final est conçu et entretenu en ce qui a trait au rejet de substances nocives;

(c) the name of the receiving body of water, if there is a name.

SOR/2006-239, s. 4; SOR/2018-99, ss. 8, 36.

10 (1) The owner or operator of a mine shall submit in writing to the Minister of the Environment the information required by section 9, for

(a) any final discharge point that is identified by an inspector, and that was not identified as required by section 9, within 30 days after the discharge point is identified; and

(b) each new final discharge point, at least 60 days before depositing effluent from that new final discharge point.

(2) The owner or operator shall submit in writing to the Minister of the Environment the information on any proposed change to a final discharge point at least 60 days before the change is to be made.

SOR/2018-99, s. 36.

Monitoring Equipment Information

11 The owner or operator of a mine shall keep records relating to effluent monitoring equipment that contain

(a) a description of the equipment and, if applicable, the manufacturer's specifications and the year and model number of the equipment; and

(b) the results of the calibration tests of the equipment.

c) le nom du milieu aquatique récepteur, si ce nom existe.

DORS/2006-239, art. 4; DORS/2018-99, art. 8 et 36.

10 (1) Le propriétaire ou l'exploitant d'une mine présente par écrit au ministre de l'Environnement les renseignements visés à l'article 9 relativement à :

a) tous les points de rejet final que désigne l'inspecteur et qui n'ont pas été déterminés en application de l'article 9, dans les trente jours suivant leur désignation;

b) tout nouveau point de rejet final, au moins soixante jours avant qu'un effluent en soit rejeté.

(2) Il présente par écrit au ministre de l'Environnement des précisions sur toute modification proposée d'un point de rejet final au moins soixante jours avant que la modification soit apportée.

DORS/2018-99, art. 36.

Renseignements sur l'équipement de surveillance

11 Le propriétaire ou l'exploitant d'une mine tient un registre concernant l'équipement de surveillance des effluents et y consigne :

a) la description de l'équipement et, le cas échéant, les spécifications du fabricant ainsi que l'année et le numéro du modèle de l'équipement;

b) les résultats des essais d'étalonnage de l'équipement.

DIVISION 2

Effluent Monitoring Conditions

Deleterious Substance and pH Testing

12 (1) The owner or operator of a mine shall, not less than once per week and at least 24 hours apart, collect from each final discharge point a grab sample or composite sample of effluent and record the pH of the sample at the time of its collection and record, without delay after collecting the sample, the concentrations of the deleterious substances prescribed in section 3.

SECTION 2

Conditions portant sur le suivi de l'effluent

Essais concernant le pH et les substances nocives

12 (1) Au moins une fois par semaine et à au moins vingt-quatre heures d'intervalle, le propriétaire ou l'exploitant d'une mine prélève, à partir de chaque point de rejet final, un échantillon instantané ou un échantillon composite d'effluent dont il enregistre le pH au moment du prélèvement ainsi que, sans délai après celui-ci, les concentrations des substances nocives désignées à l'article 3.

(2) Testing conducted under subsection (1) shall comply with the analytical requirements set out in Table 1 of Schedule 3 and shall be done in accordance with generally accepted standards of good scientific practice at the time of the sampling using documented and validated methods.

(3) Despite subsection (1), the owner or operator of a mine is not required to collect samples for the purpose of recording the concentrations of cyanide if cyanide has never been used as a process reagent at the mine.

SOR/2006-239, s. 5; SOR/2018-99, s. 9.

13 (1) The owner or operator of a mine may reduce the frequency of conducting tests relating to the concentrations of arsenic, copper, cyanide, lead, nickel or zinc at a final discharge point to not less than once in each calendar quarter, each test being conducted at least one month apart, if that substance's monthly mean concentration at that final discharge point is less than 10% of the value set out in column 2 of Schedule 4 for 12 consecutive months.

(2) The owner or operator of a mine, other than an uranium mine, may reduce the frequency of conducting tests relating to the concentration of radium 226 at a final discharge point to not less than once in each calendar quarter, each test being conducted at least one month apart, if the concentration of radium 226 at that final discharge point is less than 0.037 Bq/L for 10 consecutive weeks.

(3) The owner or operator of a mine shall increase the frequency of conducting tests relating to the concentration of a deleterious substance at a final discharge point to the frequency prescribed in section 12

(a) in the case of a deleterious substance mentioned in subsection (1), if that substance's monthly mean concentration at that final discharge point is equal to or greater than 10% of the value set out in column 2 of Schedule 4; and

(b) in the case of radium 226, if the concentration of radium 226 at that final discharge point is equal to or greater than 0.037 Bq/L.

(4) The owner or operator of a mine shall increase the frequency of conducting tests relating to the concentration of a deleterious substance at all final discharge points to the frequency prescribed in section 12 for all the substances mentioned in subsections (1) and (2) if the owner or operator

(a) fails to perform a test required under those subsections in accordance with the prescribed frequency; or

(2) Les essais effectués en application du paragraphe (1) doivent satisfaire aux exigences analytiques prévues au tableau 1 de l'annexe 3 et doivent être effectués conformément aux normes généralement reconnues régissant les bonnes pratiques scientifiques au moment de l'échantillonnage et selon des méthodes éprouvées et validées.

(3) Malgré le paragraphe (1), le propriétaire ou l'exploitant d'une mine n'a pas à prélever d'échantillon afin d'enregistrer la concentration de cyanure si cette substance n'a jamais été utilisée comme réactif de procédé à la mine.

DORS/2006-239, art. 5; DORS/2018-99, art. 9.

13 (1) Le propriétaire ou l'exploitant d'une mine peut, à un point de rejet final, réduire la fréquence des essais concernant la concentration d'arsenic, de cuivre, de cyanure, de plomb, de nickel ou de zinc à au moins une fois par trimestre civil, chaque essai étant effectué à au moins un mois d'intervalle, si la concentration moyenne mensuelle de la substance à ce point de rejet final est inférieure à 10 % de la valeur établie à la colonne 2 de l'annexe 4 pendant douze mois consécutifs.

(2) Le propriétaire ou l'exploitant d'une mine autre qu'une mine d'uranium peut, à un point de rejet final, réduire la fréquence des essais concernant la concentration de radium 226 à au moins une fois par trimestre civil, chaque essai étant effectué à au moins un mois d'intervalle, si la concentration à ce point de rejet final est inférieure à 0,037 Bq/L pendant dix semaines consécutives.

(3) Le propriétaire ou l'exploitant d'une mine porte la fréquence des essais concernant la concentration des substances nocives ci-après à celle prévue à l'article 12, à un point de rejet final, si :

a) dans le cas d'une substance nocive énumérée au paragraphe (1), la concentration moyenne mensuelle de cette substance, à ce point de rejet final, est égale ou supérieure à 10 % de la valeur établie à la colonne 2 de l'annexe 4;

b) dans le cas du radium 226, la concentration de cette substance, à ce point de rejet final, est égale ou supérieure à 0,037 Bq/L.

(4) Le propriétaire ou l'exploitant d'une mine porte la fréquence des essais concernant la concentration des substances nocives énumérées aux paragraphes (1) et (2) à celle prévue à l'article 12, à tous les points de rejet final, s'il omet :

a) soit d'effectuer les essais visés à ces paragraphes selon la fréquence requise;

(b) fails to submit a report required under subsection 21(1) or section 22 within the prescribed time.

(5) If the owner or operator of a mine changes the location of a final discharge point, the owner or operator shall increase the frequency of conducting tests relating to the concentration of a deleterious substance at that final discharge point to the frequency prescribed in section 12 for all the deleterious substances mentioned in subsections (1) and (2).

(6) The owner or operator of a mine who reduces the frequency of conducting tests under subsection (1) or (2) shall

(a) notify the Minister of the Environment, in writing, at least 30 days in advance, of that fact;

(b) select and record the sampling dates not less than 30 days in advance of collecting the samples of effluent; and

(c) collect the sample on the selected day except if, owing to unforeseen circumstances, they cannot sample on that day, in which case, they shall do so as soon as practicable after that day.

SOR/2006-239, s. 6; SOR/2018-99, s. 9.

b) soit de présenter le rapport visé au paragraphe 21(1) ou à l'article 22 dans les délais prescrits.

(5) Si un point de rejet final est déplacé, le propriétaire ou l'exploitant d'une mine porte la fréquence des essais concernant la concentration des substances nocives, à ce point de rejet final, à celle prévue à l'article 12 pour toutes les substances nocives énumérées aux paragraphes (1) et (2).

(6) Le propriétaire ou l'exploitant d'une mine qui réduit la fréquence des essais en vertu des paragraphes (1) ou (2) prend les mesures suivantes :

a) il avise par écrit le ministre de l'Environnement de la réduction de la fréquence des essais, au moins trente jours avant celle-ci;

b) il choisit et enregistre, au moins trente jours à l'avance, la date de l'échantillonnage;

c) il prélève l'échantillon ce jour-là ou, si des circonstances imprévues l'en empêchent, le plus tôt possible après ce jour.

DORS/2006-239, art. 6; DORS/2018-99, art. 9.

Acute Lethality Testing

General

14 (1) Subject to section 15, the owner or operator of a mine shall collect, once a month, a grab sample of effluent from each final discharge point and determine whether the effluent is acutely lethal by conducting acute lethality tests on aliquots of each effluent sample in accordance with sections 14.1 and 14.2.

(2) For the purposes of subsection (1), the owner or operator of a mine

(a) shall select and record the sampling date not less than 30 days in advance of collecting the grab sample;

(b) shall collect the sample on the selected day except if, owing to unforeseen circumstances, they cannot sample on that day, in which case, they shall do so as soon as practicable after that day; and

(c) shall collect the grab samples not less than 15 days apart.

Essai de détermination de la létalité aiguë

Généralités

14 (1) Sous réserve de l'article 15, le propriétaire ou l'exploitant d'une mine prélève une fois par mois un échantillon instantané d'effluent à chaque point de rejet final et détermine si cet effluent présente une létalité aiguë en effectuant des essais de détermination de la létalité aiguë sur des portions aliquotes de chaque échantillon conformément aux articles 14.1 et 14.2.

(2) Pour l'application du paragraphe (1), le propriétaire ou l'exploitant d'une mine :

a) choisit et enregistre, au moins trente jours à l'avance, la date de l'échantillonnage;

b) prélève l'échantillon ce jour-là ou, si des circonstances imprévues l'en empêchent, le plus tôt possible après ce jour;

c) prélève les échantillons instantanés à au moins quinze jours d'intervalle.

(3) When collecting a grab sample of effluent for the purposes of subsection (1), the owner or operator of a mine shall collect a sufficient volume of effluent to enable the owner or operator to comply with paragraph 15(1)(a).

SOR/2006-239, s. 7; SOR/2011-92, s. 4; SOR/2012-22, s. 3; SOR/2018-99, s. 10.

Acute Lethality Test — Rainbow Trout

14.1 Unless the salinity value of the effluent is equal to or greater than ten parts per thousand and the effluent is deposited into marine waters, the owner or operator of a mine shall determine whether the effluent is acutely lethal by conducting an acute lethality test in accordance with the procedures set out in section 5 or 6 of Reference Method EPS 1/RM/13.

SOR/2018-99, s. 10.

Acute Lethality Test — Threespine Stickleback

14.2 If the salinity value of the effluent is equal to or greater than ten parts per thousand and the effluent is deposited into marine waters, the owner or operator of a mine shall determine whether the effluent is acutely lethal by conducting an acute lethality test in accordance with the procedures set out in section 5 or 6 of Reference Method EPS 1/RM/10.

SOR/2018-99, s. 10.

Increased Frequency of Acute Lethality Testing

15 (1) If an effluent sample is determined to be acutely lethal by an acute lethality test, the owner or operator of a mine shall

(a) without delay, conduct the effluent characterization set out in subsection 4(1) of Schedule 5 on the aliquot of each grab sample collected under subsection 14(1) and record the concentrations of the deleterious substances prescribed in section 3;

(b) collect, from the final discharge point from which the effluent sample that was determined to be acutely lethal was collected, a grab sample twice a month and, without delay after collecting the sample, conduct the acute lethality test that determined the effluent sample to be acutely lethal on each grab sample in accordance with the procedure set out in section 6 of the applicable reference method and, if the sample is determined to be acutely lethal, then conduct the effluent characterization set out in subsection 4(1) of

(3) Lors du prélèvement des échantillons instantanés en application du paragraphe (1), le propriétaire ou l'exploitant d'une mine prélève un volume d'effluent suffisant pour lui permettre de se conformer à l'alinéa 15(1)a).

DORS/2006-239, art. 7; DORS/2011-92, art. 4; DORS/2012-22, art. 3; DORS/2018-99, art. 10.

Essai de détermination de la létalité aiguë — Truite arc-en-ciel

14.1 Sauf dans le cas où la salinité de l'effluent est égale ou supérieure à dix parties par millier et que l'effluent est rejeté dans l'eau de mer, le propriétaire ou l'exploitant d'une mine détermine si l'effluent présente une létalité aiguë en effectuant un essai de détermination de la létalité aiguë conformément aux modes opératoires prévus aux sections 5 ou 6 de la méthode de référence SPE 1/RM/13.

DORS/2018-99, art. 10.

Essai de détermination de la létalité aiguë — Épinoche à trois épines

14.2 Si la salinité de l'effluent est égale ou supérieure à dix parties par millier et que l'effluent est rejeté dans l'eau de mer, le propriétaire ou l'exploitant d'une mine détermine si l'effluent présente une létalité aiguë en effectuant un essai de détermination de la létalité aiguë conformément aux modes opératoires prévus aux sections 5 ou 6 de la méthode de référence SPE 1/RM/10.

DORS/2018-99, art. 10.

Fréquence accrue des essais de détermination de la létalité aiguë

15 (1) S'il est établi qu'un échantillon d'effluent présente une létalité aiguë après un essai de détermination de la létalité aiguë, le propriétaire ou l'exploitant d'une mine :

a) sans délai, effectue la caractérisation de l'effluent conformément au paragraphe 4(1) de l'annexe 5 sur une portion aliquote de chaque échantillon instantané prélevé en application du paragraphe 14(1) et enregistre les concentrations des substances nocives désignées à l'article 3;

b) deux fois par mois, prélève un échantillon instantané à partir du point de rejet final d'où l'échantillon d'effluent qui présente une létalité aiguë a été prélevé et effectue sans délai après le prélèvement, sur chacun de ces échantillons, selon le mode opératoire prévu à la section 6 de la méthode de référence, l'essai de détermination de la létalité aiguë à partir duquel la létalité aiguë de l'échantillon a été établie. S'il est ainsi établi que l'échantillon présente une létalité aiguë, le

Schedule 5 and record the concentrations of the deleterious substances prescribed in section 3; and

(c) collect the grab samples not less than seven days apart.

(2) The owner or operator may resume sampling and testing at the frequency prescribed in section 14 if the effluent is determined not to be acutely lethal in three consecutive tests conducted under paragraph (1)(b).

SOR/2006-239, s. 8; SOR/2018-99, s. 12.

Reduced Frequency of Acute Lethality Testing

16 (1) The owner or operator of a mine may reduce the frequency of conducting an acute lethality test at a final discharge point to once in each calendar quarter if the effluent from that final discharge point is determined not to be acutely lethal by that acute lethality test for 12 consecutive months.

(2) For the purpose of determining whether that effluent is acutely lethal for the 12-month period referred to in subsection (1), the owner or operator of a mine shall use the results of the acute lethality tests conducted under subsection 14(1).

(3) The owner or operator of a mine shall notify the Minister of the Environment in writing at least 30 days before the reduction of the frequency of acute lethality testing.

(4) The owner or operator who reduces the frequency of conducting acute lethality testing under subsection (1) shall

(a) select and record the sampling date not less than 30 days in advance of collecting the grab samples; and

(b) collect the grab samples not less than 45 days apart.

(5) If a grab sample is determined to be acutely lethal by an acute lethality test when the owner or operator of a mine is testing at the frequency prescribed in subsection (1), the owner or operator shall increase the frequency of conducting that test to the frequency prescribed in section 15 and conduct that test in accordance with that section.

(6) If the location of a final discharge point is changed, the owner or operator of a mine shall, at that final discharge point, increase the frequency of conducting all the acute lethality tests to the frequency prescribed in

propriétaire ou l'exploitant d'une mine effectue la caractérisation de l'effluent conformément au paragraphe 4(1) de l'annexe 5 et enregistre les concentrations des substances nocives désignées à l'article 3;

c) prélève les échantillons instantanés à au moins sept jours d'intervalle.

(2) Il peut recommencer à effectuer l'échantillonnage et les essais à la fréquence fixée à l'article 14 si l'effluent ne présente pas de létalité aiguë dans trois essais consécutifs effectués selon l'alinéa (1)b).

DORS/2006-239, art. 8; DORS/2018-99, art. 12.

Fréquence réduite des essais de détermination de la létalité aiguë

16 (1) Le propriétaire ou l'exploitant d'une mine peut réduire à une fois par trimestre civil la fréquence d'un essai de détermination de la létalité aiguë à un point de rejet final si, pendant douze mois consécutifs, l'effluent à ce point de rejet final ne présente pas de létalité aiguë selon cet essai.

(2) Pour établir si l'effluent présente une létalité aiguë pendant la période de douze mois visée au paragraphe (1), le propriétaire ou l'exploitant d'une mine se fonde sur les résultats obtenus aux termes du paragraphe 14(1).

(3) Le propriétaire ou l'exploitant d'une mine avise par écrit le ministre de l'Environnement de la réduction de la fréquence des essais au moins trente jours avant celle-ci.

(4) Le propriétaire ou l'exploitant qui réduit la fréquence des essais en application du paragraphe (1) prend les mesures suivantes :

a) il choisit et enregistre, au moins trente jours à l'avance, la date de l'échantillonnage;

b) il prélève les échantillons instantanés à au moins quarante-cinq jours d'intervalle.

(5) S'il est établi qu'un échantillon instantané d'effluent présente une létalité aiguë selon un essai de détermination de la létalité aiguë alors que cet essai est effectué à la fréquence prévue au paragraphe (1), le propriétaire ou l'exploitant d'une mine porte la fréquence de cet essai à celle prévue à l'article 15 et effectue cet essai conformément à cet article.

(6) Si l'emplacement d'un point de rejet final est déplacé, le propriétaire ou l'exploitant d'une mine porte la fréquence de tous les essais de détermination de la létalité aiguë à ce point de rejet final à celle prévue au

subsection 14(1) and conduct those tests in accordance with that subsection.

SOR/2012-22, s. 4; SOR/2018-99, s. 14.

paragraphe 14(1) et effectue ces essais conformément à ce paragraphe.

DORS/2012-22, art. 4; DORS/2018-99, art. 14.

Daphnia magna Monitoring Tests

17 (1) Unless the salinity value of the effluent is equal to or greater than four parts per thousand and the effluent is deposited into marine waters, the owner or operator of a mine shall conduct *Daphnia magna* monitoring tests in accordance with the procedure set out in section 5 or 6 of Reference Method EPS 1/RM/14 at the same time that the acute lethality tests are conducted under section 14, 15 or 16 of these Regulations.

(2) The owner or operator shall conduct *Daphnia magna* monitoring tests on the aliquots of each effluent sample collected for the acute lethality tests.

SOR/2018-99, s. 15.

Essai de suivi avec bioessais sur la *Daphnia magna*

17 (1) Sauf dans le cas où la salinité de l'effluent est égale ou supérieure à quatre parties par millier et que l'effluent est rejeté dans l'eau de mer, le propriétaire ou l'exploitant d'une mine qui fait des essais de détermination de la létalité aiguë en application des articles 14, 15 ou 16 effectue au même moment des essais de suivi avec bioessais sur la *Daphnia magna* selon les modes opératoires prévus aux sections 5 ou 6 de la méthode de référence SPE 1/RM/14.

(2) Il effectue chaque essai de suivi sur des portions aliquotes de chaque échantillon d'effluent prélevé pour les essais de détermination de la létalité aiguë.

DORS/2018-99, art. 15.

Obligation to Record All Test Results

18 The owner or operator of a mine shall record without delay the data referred to in section 9.1 of Reference Method EPS 1/RM/10, section 8.1 of Reference Method EPS 1/RM/13 and section 8.1 of Reference Method EPS 1/RM/14 for all acute lethality tests and *Daphnia magna* monitoring tests that are conducted to monitor deposits from final discharge points.

SOR/2018-99, s. 16.

Enregistrement des renseignements

18 Le propriétaire ou l'exploitant d'une mine enregistre sans délai les données visées à la section 9.1 de la méthode de référence SPE 1/RM/10, à la section 8.1 de la méthode de référence SPE 1/RM/13 et à la section 8.1 de la méthode de référence SPE 1/RM/14 pour tous les essais de détermination de la létalité aiguë et tous les essais de suivi avec bioessais sur la *Daphnia magna* effectués dans le cadre du suivi des rejets provenant de points de rejet final.

DORS/2018-99, art. 16.

Volume of Effluent

19 (1) The owner or operator of a mine shall record, in cubic metres, the total monthly volume of effluent deposited from each final discharge point for each month during which there was a deposit.

(2) The total monthly volume of effluent deposited shall be either

(a) determined on the basis of the average of the flow rates, expressed in cubic metres per day, measured and calculated as follows:

(i) by measuring the flow rate at the same time as samples are collected under section 12,

(ii) by calculating the average monthly flow rate by adding the flow rate measurements taken during

Volume d'effluent

19 (1) Le propriétaire ou l'exploitant d'une mine enregistre, en mètres cubes, le volume mensuel total d'effluent rejeté à partir de chaque point de rejet final, pour chaque mois au cours duquel un effluent a été rejeté.

(2) Le volume mensuel total d'effluent rejeté est :

a) soit fondé sur la moyenne des débits, exprimée en mètres cubes par jour, auquel cas il est déterminé de la façon suivante :

(i) le débit est mesuré au moment où les échantillons sont prélevés en application de l'article 12,

the month and dividing the total by the number of times the flow rate was measured, and

(iii) by multiplying the average monthly flow rate by the number of days during the month that effluent was deposited; or

(b) determined by using a monitoring system that provides a continuous measure of the volume of effluent deposited.

(3) The owner or operator shall

(a) measure the flow rate or volume of effluent deposited by using a monitoring system that is accurate to within 15% of measured flow rate or volume; and

(b) maintain and calibrate the monitoring system at least once in each year and record the results, as well as the date on which and the manner in which the requirement to maintain and calibrate has been met.

SOR/2006-239, s. 9; SOR/2012-22, s. 5; SOR/2018-99, s. 17.

Calculation of Monthly Mean Concentration and Loading

19.1 (1) With respect to the deleterious substances that are contained in the effluent deposited from each final discharge point, the owner or operator of a mine shall, for each month during which there is a deposit and during which samples are collected, record the monthly mean concentration

(a) in mg/L for deleterious substances referred to in paragraphs 3(a) to (g); and

(b) in Bq/L for a deleterious substance referred to in paragraph 3(h).

(2) If the analytical result from any test conducted under section 12 or 13 is less than the method detection limit used for that test, the test result shall be considered to be equal to one half of the detection limit used for the purpose of calculating the monthly mean concentration.

SOR/2006-239, s. 9; SOR/2018-99, s. 18.

20 (1) With respect to the deleterious substances that are contained in the effluent deposited from each final discharge point, the owner or operator of a mine shall, for each month and for each calendar quarter during which there was a deposit and during which a sample is collected, record the loading

(ii) la moyenne mensuelle des débits est calculée par la division du total des mesures de débit enregistrées au cours du mois par le nombre de mesures prises,

(iii) la moyenne mensuelle des débits est multipliée par le nombre de jours où l'effluent a été rejeté;

b) soit déterminé à l'aide d'un système de surveillance à mesure continue.

(3) Le propriétaire ou l'exploitant mesure le volume ou le débit d'effluent rejeté en tenant compte des exigences suivantes :

a) il utilise à cette fin un système de surveillance donnant des mesures exactes à 15 % près;

b) il entretient et étalonne le système de surveillance au moins une fois par année et enregistre les résultats, la date à laquelle il s'est conformé à cette exigence ainsi que la manière dont il s'y est pris.

DORS/2006-239, art. 9; DORS/2012-22, art. 5; DORS/2018-99, art. 17.

Calcul de la concentration moyenne mensuelle et de la charge

19.1 (1) À l'égard des substances nocives désignées à l'article 3 se trouvant dans l'effluent rejeté à partir de chaque point de rejet final, le propriétaire ou l'exploitant d'une mine enregistre, pour chaque mois au cours duquel un effluent est rejeté et des prélèvements sont effectués :

a) la concentration moyenne mensuelle en mg/L des substances nocives énumérées aux alinéas 3a) à g);

b) la concentration moyenne mensuelle en Bq/L de la substance nocive figurant à l'alinéa 3h).

(2) Si le résultat analytique de tout essai effectué en application des articles 12 ou 13 est inférieur à la limite de détection de la méthode utilisée pour l'essai, il est considéré comme égal à la moitié de la limite de détection de la méthode utilisée pour le calcul de la concentration moyenne mensuelle.

DORS/2006-239, art. 9; DORS/2018-99, art. 18.

20 (1) À l'égard des substances nocives désignées à l'article 3 se trouvant dans l'effluent rejeté à partir de chaque point de rejet final, le propriétaire ou l'exploitant d'une mine enregistre, pour chaque mois et pour chaque trimestre civil au cours duquel un effluent a été rejeté et des prélèvements ont été effectués :

(a) in kg for deleterious substances referred to in paragraphs 3(a) to (g); and

(b) in MBq for a deleterious substance referred to in paragraph 3(h).

(2) The owner or operator shall determine the loading for each month using the following formula:

ML = C × V / 1,000

where

ML is the loading for a month;

C is the monthly mean concentration of the deleterious substance, recorded under section 19.1; and

V is the total monthly volume of effluent deposited from each final discharge point, recorded under section 19.

(3) The owner or operator shall determine the loading for each calendar quarter using the following formula:

QL = C × V / 1,000

where

QL is the loading for a calendar quarter;

C is the mean of the monthly mean concentrations of the deleterious substance for that calendar quarter, recorded under section 19.1; and

V is the total volume of effluent deposited from each final discharge point during that calendar quarter, based on the sum of the total monthly volumes of effluent deposited from each final discharge point, recorded under section 19.

SOR/2006-239, s. 9; SOR/2018-99, s. 19.

a) la charge en kg des substances nocives énumérées aux alinéas 3a) à g);

b) la charge en MBq de la substance nocive figurant l'alinéa 3h).

(2) Il détermine la charge pour chaque mois civil selon la formule suivante :

CM = C × V / 1 000

où :

CM représente la charge pour un mois;

C la concentration moyenne mensuelle de la substance nocive enregistrée en application de l'article 19.1;

V le volume total d'effluent rejeté à partir de chaque point de rejet final au cours du mois et enregistré en application de l'article 19.

(3) Il détermine la charge pour le trimestre civil selon la formule suivante :

CT = C × V / 1 000

où :

CT représente la charge pour un trimestre;

C la moyenne des concentrations moyennes mensuelles de la substance nocive enregistrées au cours du trimestre en application de l'article 19.1;

V le volume total d'effluent rejeté à partir de chaque point de rejet final au cours du trimestre, fondé sur la somme des volumes mensuels d'effluent rejeté à partir de chaque point de rejet final et enregistrés en application de l'article 19.

DORS/2006-239, art. 9; DORS/2018-99, art. 19.

Reporting Monitoring Results

21 (1) The owner or operator of a mine shall submit to the Minister of the Environment an effluent monitoring report for all tests and monitoring conducted during each calendar quarter not later than 45 days after the end of the quarter.

(2) Subject to subsection (3), the effluent monitoring report shall include

(a) the data referred to in section 9.1 of Reference Method EPS 1/RM/10, section 8.1 of Reference Method EPS 1/RM/13 and section 8.1 of Reference Method EPS 1/RM/14 as required by section 18;

(b) the concentration and monthly mean concentration of each deleterious substance prescribed in section 3 that is contained in the effluent samples

Rapports sur les résultats de suivi

21 (1) Le propriétaire ou l'exploitant d'une mine présente au ministre de l'Environnement un rapport sur le suivi de l'effluent pour tout essai ou mesure de suivi effectué au cours de chaque trimestre civil, dans les quarante-cinq jours suivant la fin du trimestre.

(2) Sous réserve du paragraphe (3), le rapport comporte ce qui suit :

a) les données visées à la section 9.1 de la méthode de référence SPE 1/RM/10, à la section 8.1 de la méthode de référence SPE 1/RM/13 et à la section 8.1 de la méthode de référence SPE 1/RM/14, qu'exige l'article 18;

b) la concentration et la concentration moyenne mensuelle des substances nocives désignées à l'article 3 se trouvant dans les échantillons d'effluent prélevés en

collected under subsection 12(1) and the concentrations of such deleterious substances contained in the effluent samples collected under subsection 13(1) or (2);

(c) the pH of the effluent samples as required by subsection 12(1);

(d) whether a composite or grab sample collection method was used for each effluent sample as required by subsection 12(1);

(d.1) for each month of the calendar quarter, the number of days that effluent was deposited;

(e) the total volume of effluent deposited during each month of the reporting quarter as recorded under section 19;

(f) the mass loading of the deleterious substances prescribed in section 3 as recorded under section 20; and

(g) the results of the effluent characterization conducted under paragraph 15(1)(a).

(3) If no effluent is deposited in a calendar quarter, the report shall only include a statement to that effect.

SOR/2006-239, s. 10; SOR/2018-99, ss. 20, 36.

22 The owner or operator of a mine shall submit to the Minister of the Environment, not later than March 31 in each year, a report in the form set out in Schedule 6, that shall include the following:

(a) the identifying information set out in Part 1 of that Schedule;

(b) the effluent monitoring results for the previous calendar year, including

(i) test results respecting each final discharge point, and

(ii) the results of acute lethality tests; and

(c) the following information regarding non-compliance:

(i) if the results of any effluent monitoring tests indicate that the maximum authorized concentrations set out in Schedule 4 were exceeded or that the pH of the effluent is less than 6.0 or greater than 9.5, the causes of that non-compliance and the remedial measures that are planned or that have been implemented, and

application du paragraphe 12(1) de même que la concentration de ces substances nocives dans les échantillons d'effluent prélevés au titre des paragraphes 13(1) ou (2);

c) le pH des échantillons, exigé par le paragraphe 12(1);

d) pour chaque échantillon d'effluent prélevé en application du paragraphe 12(1), s'il s'agit d'un échantillon composite ou instantané;

d.1) pour chaque mois du trimestre civil, le nombre de jours où il y a eu rejet d'effluent;

e) le volume total d'effluent rejeté pour chaque mois du trimestre, enregistré en application de l'article 19;

f) la charge des substances nocives désignées à l'article 3 enregistrée en application de l'article 20;

g) les résultats des essais de caractérisation de l'effluent effectués conformément à l'alinéa 15(1)a).

(3) Si au cours d'un trimestre civil aucun effluent n'a été rejeté, le rapport ne comporte qu'une mention à cet effet.

DORS/2006-239, art. 10; DORS/2018-99, art. 20 et 36.

22 Le propriétaire ou l'exploitant d'une mine présente au ministre de l'Environnement, au plus tard le 31 mars de chaque année, un rapport en la forme prévue à l'annexe 6 et comportant les renseignements suivants :

a) les renseignements identificatoires prévus à la partie 1 de cette annexe;

b) les résultats du suivi de l'effluent pour l'année civile précédente dont :

(i) les résultats des essais à chacun des points de rejet final,

(ii) les résultats des essais de détermination de la létalité aiguë;

c) les renseignements suivants sur la non-conformité :

(i) si les résultats des essais de suivi de l'effluent montrent que les concentrations maximales permises prévues à l'annexe 4 ont été dépassées ou que le pH de l'effluent est inférieur à 6,0 ou supérieur à 9,5, les causes ainsi que les mesures correctives projetées ou mises en œuvre,

(ii) if the results of any acute lethality tests indicate that an effluent sample was determined to be acutely lethal, the remedial measures that are planned or that have been implemented.

SOR/2006-239, s. 11; SOR/2018-99, s. 21.

23 Any report or information referred to in sections 7, 21 and 22 shall be submitted electronically in the format provided by the Department of the Environment, but the report or information shall be submitted in writing if

(a) no such format has been provided; or

(b) it is, owing to circumstances beyond the control of either the owner or the operator, impracticable to submit the report or information electronically in the format provided.

SOR/2006-239, s. 11; SOR/2018-99, s. 22.

24 (1) The owner or operator of a mine shall notify an inspector without delay if the results of the effluent monitoring tests conducted under section 12 or 13, subsection 14(1) or section 15 or 16 indicate that

(a) the limits set out in Schedule 4 are being or have been exceeded;

(b) the pH of the effluent is less than 6.0 or greater than 9.5; or

(c) an effluent is acutely lethal.

(2) The owner or operator shall provide a written report of the test results to the inspector within 30 days after the tests have been completed.

(3) [Repealed, SOR/2018-99, s. 23]

SOR/2006-239, s. 12; SOR/2018-99, s. 23.

Relief

25 (1) Any time period specified for collecting samples of effluent referred to in this Division may be extended if

(a) unforeseen circumstances cause safety concerns or access problems and render the collection of samples of effluent impracticable; and

(b) the owner or operator of a mine notifies an inspector, without delay, of the circumstances and indicates when they expect to be able to collect the samples.

(ii) si les résultats des essais de détermination de la létalité aiguë démontrent qu'un échantillon d'effluent présente une létalité aiguë, les mesures correctives projetées ou mises en œuvre.

DORS/2006-239, art. 11; DORS/2018-99, art. 21.

23 Les rapports et renseignements visés aux articles 7, 21 et 22 sont présentés sous forme électronique selon le modèle fourni par le ministère de l'Environnement. Ils sont toutefois présentés par écrit dans l'un ou l'autre des cas suivants :

a) aucun modèle n'est fourni;

b) il est pratiquement impossible, pour des raisons indépendantes de la volonté du propriétaire ou de l'exploitant, selon le cas, de les présenter sous forme électronique selon le modèle fourni.

DORS/2006-239, art. 11; DORS/2018-99, art. 22.

24 (1) Le propriétaire ou l'exploitant d'une mine avise sans délai l'inspecteur si les résultats des essais de suivi de l'effluent effectués au titre des articles 12 ou 13, du paragraphe 14(1) ou des articles 15 ou 16 montrent que :

a) les limites prévues à l'annexe 4 sont ou ont été dépassées;

b) le pH de l'effluent est inférieur à 6,0 ou supérieur à 9,5;

c) l'effluent est un effluent à létalité aiguë.

(2) Il présente à l'inspecteur un rapport écrit des résultats des essais dans les trente jours suivant la fin de ceux-ci.

(3) [Abrogé, DORS/2018-99, art. 23]

DORS/2006-239, art. 12; DORS/2018-99, art. 23.

Dispense

25 (1) Les délais prévus dans la présente section à l'égard du prélèvement des échantillons d'effluent peuvent être prorogés si les conditions suivantes sont réunies :

a) des circonstances imprévues provoquent des problèmes de sécurité ou d'accessibilité et rendent le prélèvement d'échantillons d'effluent pratiquement impossible;

b) le propriétaire ou l'exploitant d'une mine a avisé l'inspecteur sans délai des circonstances et lui a indiqué le moment où il croit pouvoir procéder au prélèvement des échantillons.

(2) The owner or operator shall collect the samples of effluent without delay when the circumstances permit.

SOR/2006-239, s. 13.

(2) Le propriétaire ou l'exploitant prélève les échantillons d'effluent sans délai dès que les circonstances le permettent.

DORS/2006-239, art. 13.

DIVISION 3

Notice, Records and Other Documents

End of Commercial Operation Notice

26 (1) The owner or operator of a mine shall notify the Minister of the Environment in writing of the day on which the mine has stopped commercial operation not later than 90 days after the end of commercial operation.

(2) The owner or operator shall notify the Minister of the Environment in writing without delay if the mine returns to commercial operation.

SOR/2018-99, s. 36.

Records, Books of Account or Other Documents

27 The owner or operator of a mine shall keep all records, books of account or other documents required by these Regulations at the mine for a period of not less than five years, beginning on the day on which they are made, including

(a) records relating to all final discharge points, including any changes to those records;

(b) records relating to effluent monitoring equipment, including the calibration of that equipment;

(c) records relating to the data referred to in section 9.1 of Reference Method EPS 1/RM/10, section 8.1 of Reference Method EPS 1/RM/13 and section 8.1 of Reference Method EPS 1/RM/14;

(d) compensation plans;

(e) emergency response plans, including each update to the plan;

(f) reports on any unauthorized deposits;

(g) reports or other documents prepared and data collected for the purposes of environmental effects monitoring studies; and

SECTION 3

Avis, registres et autres documents

Avis de la fin de l'exploitation commerciale

26 (1) Le propriétaire ou l'exploitant d'une mine avise le ministre de l'Environnement par écrit de la date où l'exploitation commerciale de la mine a cessé, dans les quatre-vingt-dix jours suivant la cessation.

(2) Il avise le ministre de l'Environnement, par écrit et sans délai, de la reprise de l'exploitation commerciale.

DORS/2018-99, art. 36.

Registres, livres comptables ou autres documents

27 Le propriétaire ou l'exploitant d'une mine conserve à la mine, pendant au moins cinq ans à compter de leur établissement, tous les registres, livres comptables ou autres documents exigés par le présent règlement, soit, notamment :

a) les registres concernant les points de rejet final et tout changement à ces registres;

b) les registres concernant les équipements de surveillance des effluents, y compris les registres de calibration de ces équipements;

c) les registres concernant les données visées à la section 9.1 de la méthode de référence SPE 1/RM/10, à la section 8.1 de la méthode de référence SPE 1/RM/13 et à la section 8.1 de la méthode de référence SPE 1/RM/14;

d) les plans compensatoires;

e) les plans d'intervention d'urgence et chacune de leurs mises à jour;

f) tout rapport sur le rejet non autorisé;

(h) records and reports of measurements with respect to the pH, temperature and concentration of any deleterious substance prescribed in section 3.

SOR/2018-99, s. 24.

g) tous les rapports ou autres documents préparés et toutes les données recueillies pour une étude de suivi des effets sur l'environnement;

h) registres et rapports concernant toutes les mesures de pH, de la température et des concentrations des substances nocives énumérées à l'article 3.

DORS/2018-99, art. 24.

DIVISION 4

Tailings Impoundment Areas

Compensation Plan

27.1 (1) The owner or operator of a mine shall, before depositing a deleterious substance into a tailings impoundment area that is set out in Schedule 2, submit to the Minister of the Environment a compensation plan that includes the information described in subsection (2) and obtain that Minister's approval of the plan.

(2) The purpose of the compensation plan is to offset the loss of fish habitat resulting from the deposit of any deleterious substance into the tailings impoundment area. It shall contain the following information:

(a) a description of the location of the tailings impoundment area and of fish habitat that will be affected by the deposit;

(b) a quantitative impact assessment of the deposit on fish habitat;

(c) a description of the measures to be taken to offset the loss of fish habitat;

(d) a description of the measures to be taken during the planning and implementation of the compensation plan to mitigate any potential adverse effects on fish habitat that could result from the plan's implementation;

(e) a description of the measures to be taken to monitor the plan's implementation;

(f) a description of the measures to be taken to verify the extent to which the plan's purpose has been achieved;

(g) the time required to implement the plan that allows for the achievement of the plan's purpose within a reasonable time; and

(h) an estimate of the cost of implementing each element of the plan.

SECTION 4

Dépôts de résidus miniers

Plan compensatoire

27.1 (1) Avant de rejeter des substances nocives dans tout dépôt de résidus miniers qui figure à l'annexe 2, le propriétaire ou l'exploitant d'une mine présente au ministre de l'Environnement un plan compensatoire qui comporte les renseignements énumérés au paragraphe (2) et obtient son approbation.

(2) Le plan compensatoire a pour objectif de contrebalancer la perte d'habitat du poisson consécutive au rejet de substances nocives dans le dépôt de résidus miniers. Il comporte les renseignements suivants :

a) une description de l'emplacement du dépôt de résidus miniers et de l'habitat du poisson qui sera affecté par le rejet;

b) l'analyse quantitative de l'incidence du rejet sur l'habitat du poisson;

c) une description des mesures visant à contrebalancer la perte d'habitat du poisson;

d) une description des mesures envisagées durant la planification et la mise en œuvre du plan pour atténuer les effets défavorables sur l'habitat du poisson qui pourraient résulter de cette mise en œuvre;

e) une description des mesures de surveillance de la mise en œuvre du plan;

f) une description des mécanismes permettant de mesurer l'atteinte de l'objectif du plan;

g) le délai de la mise en œuvre du plan qui permet l'atteinte de son objectif dans un délai raisonnable;

h) l'estimation du coût de mise en œuvre de chacun des éléments du plan.

(3) The owner or operator of a mine shall submit with the compensation plan an irrevocable letter of credit to cover the plan's implementation costs, which letter of credit shall be payable upon demand on the declining balance of the implementation costs.

(4) The Minister of the Environment shall approve the compensation plan if it meets the requirements of subsection (2) and the owner or operator of a mine has complied with subsection (3).

(5) The owner or operator of a mine shall ensure that the compensation plan approved by the Minister of the Environment is implemented and, if the compensation plan's purpose is not being achieved, the owner or operator shall inform the Minister of the Environment.

(6) If the compensation plan's purpose is not being achieved, the owner or operator of a mine shall, as soon as practicable in the circumstances, identify and implement all necessary remedial measures to ensure that the purpose is achieved.

SOR/2006-239, s. 14; SOR/2018-99, s. 24.

(3) Le propriétaire ou l'exploitant d'une mine présente, avec le plan compensatoire, une lettre de crédit irrévocable couvrant les coûts de mise en œuvre du plan et payable sur demande à l'égard du coût des éléments du plan qui n'ont pas été mis en œuvre.

(4) Le ministre de l'Environnement approuve le plan compensatoire si celui-ci satisfait aux exigences visées au paragraphe (2) et si le propriétaire ou l'exploitant de la mine s'est conformé au paragraphe (3).

(5) Le propriétaire ou l'exploitant d'une mine veille à ce que le plan compensatoire qui a été approuvé par le ministre de l'Environnement soit mis en œuvre et informe ce dernier si l'objectif du plan n'a pas été atteint.

(6) Si l'objectif du plan compensatoire n'est pas atteint, le propriétaire ou l'exploitant d'une mine prend les mesures correctives nécessaires le plus tôt possible, eu égard aux circonstances.

DORS/2006-239, art. 14; DORS/2018-99, art. 24.

Deposits from Tailings Impoundment Areas

28 (1) The owner or operator of a mine shall deposit effluent from a tailings impoundment area only through a final discharge point that is monitored and reported on in accordance with the requirements of these Regulations.

(2) The owner or operator of a mine shall comply with section 6 and the conditions prescribed in paragraphs 4(1)(a) to (c) for all effluent that exits a tailing impoundment area.

Rejets à partir de dépôts de résidus miniers

28 (1) Le propriétaire ou l'exploitant d'une mine ne rejette l'effluent provenant d'un dépôt de résidus miniers qu'à un point de rejet final faisant l'objet d'un suivi et de rapports conformément aux exigences du présent règlement.

(2) Il remplit les conditions prévues aux alinéas 4(1)a) à c) et se conforme à l'article 6 lorsqu'il rejette un tel effluent.

PART 3

Unauthorized Deposits

29 [Repealed, SOR/2018-99, s. 25]

Emergency Response Plan

30 (1) The owner or operator of a mine shall prepare an emergency response plan that describes the measures to be taken in respect of a deleterious substance within the meaning of subsection 34(1) of the Act to prevent any unauthorized deposit of such a substance or to mitigate the effects of such a deposit.

PARTIE 3

Rejets non autorisés

29 [Abrogé, DORS/2018-99, art. 25]

Plan d'intervention d'urgence

30 (1) Le propriétaire ou l'exploitant d'une mine dresse un plan d'intervention d'urgence qui énonce, à l'égard d'une substance nocive au sens du paragraphe 34(1) de la Loi, les mesures à prendre pour prévenir tout rejet non autorisé d'une telle substance ou pour en atténuer les effets.

(2) The emergency response plan shall include the following elements:

(a) the identification of any unauthorized deposit that can reasonably be expected to occur at the mine and that can reasonably be expected to result in damage or danger to fish habitat or fish or the use by man of fish, and the identification of the damage or danger;

(b) a description of the measures to be used to prevent, prepare for, respond to and recover from a deposit identified under paragraph (a);

(c) a list of the individuals who are to implement the plan in the event of an unauthorized deposit, and a description of their roles and responsibilities;

(d) the identification of the emergency response training required for each of the individuals listed under paragraph (c);

(e) a list of the emergency response equipment included as part of the plan, and the equipment's location; and

(f) alerting and notification procedures including the measures to be taken to notify members of the public who may be adversely affected by a deposit identified under paragraph (a).

(3) The owner or operator shall complete the emergency response plan and have it available for inspection no later than 60 days after the mine becomes subject to this section.

(4) The owner or operator shall update and test the emergency response plan at least once each year to ensure that the plan continues to meet the requirements of subsection (2).

(4.1) The owner or operator of a mine shall, each time the emergency response plan is tested, record the following information and keep the record for at least five years:

(a) a summary of the test;

(b) the test results; and

(c) any modifications that are made to the plan as a consequence of the test.

(4.2) The owner or operator of a mine shall ensure that a copy of the most recent version of the emergency response plan is kept at the mine in a location that is readily available to the individuals who are responsible for implementing the plan.

(2) Le plan d'intervention d'urgence comporte en outre les éléments suivants :

a) la mention de tout rejet non autorisé qui pourrait se produire à la mine et entraîner des dommages ou des risques réels de dommages pour le poisson ou son habitat ou pour l'utilisation par l'homme du poisson, ainsi que l'identification de ces risques ou dommages;

b) le détail des mesures de prévention, de préparation, d'intervention et de réparation applicable à l'égard du rejet non autorisé mentionné au titre de l'alinéa a);

c) la liste des personnes chargées de mettre à exécution le plan en cas de rejet non autorisé ainsi qu'une description de leurs rôles et responsabilités;

d) la mention de la formation en intervention d'urgence exigée des personnes visées à l'alinéa c);

e) la liste de l'équipement d'intervention d'urgence prévu dans le plan et l'emplacement de cet équipement;

f) les procédures d'alerte et de notification, notamment les mesures prévues pour avertir les membres du public auxquels le rejet irrégulier mentionné au titre de l'alinéa a) pourrait causer un préjudice.

(3) Le propriétaire ou l'exploitant termine le plan d'intervention d'urgence, lequel doit être disponible pour inspection, dans les soixante jours suivant la date à laquelle la mine devient assujettie au présent article.

(4) Il tient à jour et met à l'essai le plan d'intervention d'urgence au moins une fois par année afin de veiller à ce que celui-ci satisfasse aux exigences du paragraphe (2).

(4.1) Chaque fois que le plan d'intervention est mis à l'essai, le propriétaire ou l'exploitant d'une mine consigne dans un registre les renseignements ci-après qu'il conserve pendant au moins cinq ans :

a) un résumé de l'essai;

b) les résultats de cet essai;

c) les modifications apportées au plan à la suite de cet essai.

(4.2) Il veille à ce qu'une copie du plan d'intervention d'urgence à jour soit conservée à la mine, à un endroit facilement accessible aux personnes chargées de mettre à exécution le plan.

(5) If a mine has not been subject to the requirements of this section for more than one year, a new emergency response plan shall be prepared and completed no later than 60 days after the day on which the mine again becomes subject to this section.

SOR/2006-239, s. 16; SOR/2012-22, s. 6(F); SOR/2018-99, s. 26.

Reporting

31 A report required by subsection 38(7) of the Act in respect of the unauthorized deposit of a deleterious substance shall contain the following information:

(a) the name, description and concentration of the deleterious substance deposited;

(b) the estimated quantity of the deposit and how the estimate was achieved;

(c) the day on which, and hour at which, the deposit occurred;

(d) the quantity of the deleterious substance that was deposited at a place other than through a final discharge point and the identification of that place, including the location by latitude and longitude and, if applicable, the civic address;

(e) the quantity of the deleterious substance that was deposited through a final discharge point and the identification of that discharge point;

(f) the name of the receiving body of water, if there is a name, and the location by latitude and longitude where the deleterious substance entered the receiving body of water;

(g) the results of the acute lethality tests conducted under subsection 31.1(1) or a statement indicating that acute lethality tests were not conducted but that notification was given under subsection 31.1(2);

(h) the circumstances of the deposit, the measures that were taken to mitigate the effects of the deposit and, if the emergency response plan was implemented, details concerning its implementation; and

(i) the measures that were taken, or that are intended to be taken, to prevent any similar occurrence of an unauthorized deposit.

SOR/2006-239, s. 17; SOR/2011-92, s. 6; SOR/2018-99, s. 27.

(5) Si la mine n'a pas été assujettie au présent article pendant plus d'un an, un nouveau plan d'intervention d'urgence est dressé — et doit être terminé — dans les soixante jours suivant la date à laquelle elle le redevient.

DORS/2006-239, art. 16; DORS/2012-22, art. 6(F); DORS/2018-99, art. 26.

Rapport

31 Le rapport exigé au paragraphe 38(7) de la Loi, à l'égard du rejet non autorisé d'une substance nocive, comporte les renseignements suivants :

a) le nom, la description et la concentration de la substance nocive rejetée;

b) la quantité estimative du rejet ainsi que la méthode d'estimation utilisée;

c) la date et l'heure du rejet;

d) la quantité de la substance nocive qui a été rejetée à partir d'un lieu autre qu'un point de rejet final et la mention de ce lieu ainsi que sa latitude et sa longitude et, le cas échéant, l'adresse municipale;

e) la quantité de la substance nocive qui a été rejetée à partir d'un point de rejet final, et la mention de celui-ci;

f) le nom du milieu aquatique récepteur, si ce nom existe, et la latitude et la longitude du point de pénétration de la substance nocive dans le milieu aquatique;

g) les résultats des essais de détermination de la létalité aiguë effectués en application du paragraphe 31.1(1) ou une attestation indiquant qu'aucun essai de détermination de la létalité aiguë n'a été effectué mais que l'avis visé au paragraphe 31.1(2) a été donné;

h) les circonstances du rejet, les mesures d'atténuation prises et, le cas échéant, le détail de l'exécution du plan d'intervention d'urgence;

i) les mesures prises ou planifiées afin d'éviter d'autres rejets semblables à l'avenir.

DORS/2006-239, art. 17; DORS/2011-92, art. 6; DORS/2018-99, art. 27.

Acute Lethality Testing

31.1 (1) If an unauthorized deposit of a deleterious substance occurs, the owner or operator of a mine shall, without delay, collect a grab sample of effluent at the place where the deposit occurred and determine whether the effluent is acutely lethal by conducting tests on aliquots of each effluent sample in accordance with sections 14.1 and 14.2.

(2) Despite subsection (1), the owner or operator of a mine is not required to conduct those tests if they notify an inspector, without delay, that the deposit is an acutely lethal effluent.

SOR/2018-99, s. 27.

Essai de détermination de la létalité aiguë

31.1 (1) En cas de rejet non autorisé d'une substance nocive, le propriétaire ou l'exploitant d'une mine prélève sans délai un échantillon instantané d'effluent sur les lieux du rejet non autorisé et détermine si cet effluent présente une létalité aiguë en effectuant des essais conformément aux articles 14.1 et 14.2 sur des portions aliquotes de chaque échantillon d'effluent prélevé.

(2) Malgré le paragraphe (1), le propriétaire ou l'exploitant d'une mine n'est pas tenu d'effectuer les essais s'il avise sans délai l'inspecteur que le rejet est un effluent à létalité aiguë.

DORS/2018-99, art. 27.

PART 4

Recognized Closed Mines

Requirements

32 (1) An owner or operator who intends to close a mine shall

(a) provide written notice of that intention to the Minister of the Environment;

(b) maintain the mine's rate of production at less than 10% of its design-rated capacity for a continuous period of three years starting on the day on which the written notice is received by the Minister of the Environment; and

(c) conduct a biological monitoring study during the three-year period referred to in paragraph (b) in accordance with Division 3 of Part 2 of Schedule 5.

(2) If the owner or operator has complied with all of the requirements set out in paragraphs (1)(a) to (c), the mine becomes a recognized closed mine after the expiry of the three-year period referred to in subsection (1).

(3) The owner or operator shall notify the Minister of the Environment in writing at least 60 days before reopening the recognized closed mine.

(4) The owner or operator referred to in this section shall keep at any place in Canada all records, books of account or other documents required by these Regulations for a period of not less than five years beginning on the day

PARTIE 4

Mines fermées reconnues

Exigences

32 (1) Le propriétaire ou l'exploitant qui souhaite fermer sa mine :

a) en avise le ministre de l'Environnement par écrit;

b) maintient le taux de production de la mine à moins de 10 % de sa capacité nominale durant une période continue de trois ans commençant à la date à laquelle le ministre de l'Environnement reçoit l'avis;

c) effectue, durant la période prévue à l'alinéa b), une étude de suivi biologique conformément à la section 3 de la partie 2 de l'annexe 5.

(2) La mine devient une mine fermée reconnue à l'expiration de la période de trois ans prévue au paragraphe (1) si le propriétaire ou l'exploitant s'est conformé aux exigences visées aux alinéas (1)a) à c).

(3) Le propriétaire ou l'exploitant avise par écrit le ministre de l'Environnement de la réouverture de la mine fermée reconnue au moins soixante jours avant la réouverture.

(4) Le propriétaire ou l'exploitant visé par le présent article conserve n'importe où au Canada tous les registres, livres comptables ou autres documents exigés par le présent règlement pendant au moins cinq ans à compter de

they are made, and shall notify the Minister of the Environment in writing of their location.

SOR/2006-239, s. 18; SOR/2018-99, ss. 28, 36.

Identifying Information

33 (1) The owner or operator of a recognized closed mine shall submit in writing to the Minister of the Environment the information referred to in subsection (2) not later than 60 days after the day on which

(a) the recognized closed mine becomes subject to these Regulations; or

(b) ownership of the recognized closed mine is transferred.

(2) The information that shall be submitted is the name and address of

(a) both the owner and the operator of the recognized closed mine; and

(b) any parent company of the owner or the operator.

(3) The owner or operator shall notify the Minister of the Environment of any change in the information not later than 60 days after the change occurs.

SOR/2018-99, s. 36.

34 [Repealed, SOR/2018-99, s. 29]

35 [Repealed, SOR/2018-99, s. 29]

36 [Repealed, SOR/2018-99, s. 29]

37 [Repealed, SOR/2018-99, s. 29]

38 [Repealed, SOR/2018-99, s. 29]

39 [Repealed, SOR/2018-99, s. 29]

40 [Repealed, SOR/2018-99, s. 29]

41 [Repealed, SOR/2018-99, s. 29]

42 [Repealed, SOR/2018-99, s. 29]

leur établissement et avise le ministre de l'Environnement par écrit du lieu où ils se trouvent.

DORS/2006-239, art. 18; DORS/2018-99, art. 28 et 36.

Renseignements d'identification

33 (1) Le propriétaire ou l'exploitant d'une mine fermée reconnue présente par écrit au ministre de l'Environnement les renseignements mentionnés au paragraphe (2) :

a) dans les soixante jours suivant la date à laquelle la mine fermée reconnue devient assujettie au présent règlement;

b) dans les soixante jours suivant le transfert de propriété de la mine fermée reconnue.

(2) Les renseignements à présenter sont :

a) les nom et adresse du propriétaire et de l'exploitant;

b) les nom et adresse de toute société mère du propriétaire ou de l'exploitant.

(3) Le propriétaire ou l'exploitant avise le ministre de l'Environnement de tout changement des renseignements dans les soixante jours suivant le changement.

DORS/2018-99, art. 36.

34 [Abrogé, DORS/2018-99, art. 29]

35 [Abrogé, DORS/2018-99, art. 29]

36 [Abrogé, DORS/2018-99, art. 29]

37 [Abrogé, DORS/2018-99, art. 29]

38 [Abrogé, DORS/2018-99, art. 29]

39 [Abrogé, DORS/2018-99, art. 29]

40 [Abrogé, DORS/2018-99, art. 29]

41 [Abrogé, DORS/2018-99, art. 29]

42 [Abrogé, DORS/2018-99, art. 29]

SCHEDULE 1

[Repealed, SOR/2018-99, s. 30]

ANNEXE 1

[Abrogée, DORS/2018-99, art. 30]

SCHEDULE 2

(Subsections 5(1) and 27.1(1))

Tailings Impoundment Areas

Item	Column 1 Water or Place	Column 2 Description
1	Anderson Lake, Manitoba	Anderson Lake located at 54°51′ north latitude and 100°0′ west longitude near the town of Snow Lake, Manitoba. More precisely, the area bounded by **(a)** the contour of elevation around Anderson Lake at the 285-m level, and **(b)** the control dam built at the east end of Anderson Lake.
2	Garrow Lake, Nunavut	Garrow Lake located at 75°23′ north latitude and 97°48′ west longitude near the south end of Little Cornwallis Island, Nunavut.
3	South Kemess Creek, British Columbia	That part of South Kemess Creek being within the watershed of that tributary of South Kemess Creek **(a)** extending eastwards and upstream from the centre of a tailings dam constructed at 57°1′ north latitude and 126°41′ west longitude, and **(b)** below the crest of the dam at an elevation of 1515 m.
4	Albino Lake, British Columbia	Albino Lake located at 56°39.4′ north latitude and 130°29.4′ west longitude near the Eskay Creek Mine in British Columbia. More precisely, the area bounded by **(a)** the contour of elevation around Albino Lake at the 1040-m level, and **(b)** the outlet of Albino Lake.
5	Tom MacKay Lake, British Columbia	Tom MacKay Lake located at 56°39′ north latitude and 130°34′ west longitude near the Eskay Creek Mine in British Columbia. More precisely, the area bounded by **(a)** the contour of elevation around Tom MacKay Lake at the 1078-m level, and **(b)** the outlet of Tom MacKay Lake.
6	Trout Pond, Newfoundland and Labrador	Trout Pond located at 48°39′0.81882″ north latitude and 56°29′19.704984″ west longitude in west-central Newfoundland. More precisely, the area bounded by **(a)** the contour of elevation around Trout Pond at the 270 m level, and **(b)** the outlet of Trout Pond.
7	The headwater pond of a tributary to Gill's Pond Brook, Newfoundland and Labrador	The headwater pond of a tributary to Gill's Pond Brook, located at 48°38′29.599584″ north latitude and 56°30′15.560676″ west longitude in west-central Newfoundland. More precisely, the area bounded by **(a)** the contour of elevation around the pond at the 260 m level, and **(b)** the outlet of the pond.

ANNEXE 2

(paragraphes 5(1) et 27.1(1))

Dépôts de résidus miniers

Article	Colonne 1 Eaux ou lieux	Colonne 2 Description
1	Lac Anderson, Manitoba	Le lac Anderson, situé par 54°51′ de latitude N. et 100°0′ de longitude O., près de la ville de Snow Lake, au Manitoba. Plus précisément, le lieu délimité par : **a)** la courbe de niveau à 285 m autour du lac Anderson; **b)** le barrage de régulation à l'extrémité est du lac Anderson.
2	Lac Garrow, Nunavut	Le lac Garrow, situé par 75°23′ de latitude N. et 97°48′ de longitude O., près de l'extrémité sud de la petite île Cornwallis, au Nunavut.
3	Ruisseau South Kemess, Colombie-Britannique	La partie du ruisseau South Kemess située dans le bassin hydrographique du tributaire du ruisseau South Kemess : **a)** qui s'étend vers l'est et en amont du centre d'un barrage de retenue des stériles situé par 57°1′ de latitude N. et 126°41′ de longitude O.; **b)** qui se trouve en dessous de la crête du barrage, à une altitude de 1515 m.
4	Lac Albino, Colombie-Britannique	Le lac Albino, situé par 56°39,4′ de latitude N. et 130°29,4′ de longitude O., près de la mine Eskay Creek, en Colombie-Britannique. Plus précisément, la région délimitée par : **a)** la courbe de niveau à 1040 m autour du lac Albino; **b)** la décharge du lac Albino.
5	Lac Tom MacKay, Colombie-Britannique	Le lac Tom MacKay, situé par 56°39′ de latitude N. et 130°34′ de longitude O., près de la mine Eskay Creek, en Colombie-Britannique. Plus précisément, la région délimitée par : **a)** la courbe de niveau à 1078 m autour du lac Tom MacKay; **b)** la décharge du lac Tom Mackay.
6	Trout Pond, Terre-Neuve-et-Labrador	L'étang Trout Pond, situé par 48°39′0,818 82″ de latitude N. et 56°29′19,704 984″ de longitude O., dans la partie centrale ouest de Terre-Neuve et, plus précisément, la région délimitée par : **a)** la courbe de niveau à 270 m autour de l'étang Trout Pond; **b)** la décharge de l'étang Trout Pond.

Item	Column 1 Water or Place	Column 2 Description
8	The northwest arm of Second Portage Lake, Nunavut	That portion of the northwest arm of Second Portage Lake, located at 65°1′39.29″ north latitude and 96°3′43″ west longitude, approximately 80 km north of the town of Baker Lake, Nunavut. More precisely, the area bounded by **(a)** the contour of elevation around the arm at the 146 m level, and **(b)** the dam built at the southeast end of the arm.
9	Tail Lake, Nunavut	Tail Lake, located at 68°7′25.8″ north latitude and 106°33′31.2″ west longitude, approximately 125 km southwest of the town of Cambridge Bay, Nunavut. More precisely, the area bounded by **(a)** the contour of elevation around Tail Lake at the 33.5 m level, and **(b)** the dams built at the south and north ends of the lake.
10	A portion of Wabush Lake, Newfoundland and Labrador	That portion of Wabush Lake near the towns of Labrador City and Wabush in western Labrador. More precisely, the area bounded by **(a)** the southern limit, extending from 53° north latitude, 66°50′24″ west longitude to 53° north latitude, 66°52′57″ west longitude, and **(b)** the outlet of Wabush Lake, extending from 53°09′4.7″ north latitude, 66°47′3.5″ west longitude to 53°08′57.5″ north latitude, 66°47′2.9″ west longitude.
11	Flora Lake, Newfoundland and Labrador	Flora Lake located at 52°55′ north latitude, 66°49′ west longitude, near the towns of Labrador City and Wabush in western Labrador.
12	A portion of an unnamed tributary stream to Flora Lake, Newfoundland and Labrador	A portion of an unnamed tributary stream to Flora Lake, Newfoundland and Labrador. More precisely, an area extending from the mouth of the stream (52°52′9.94″ north latitude, 66°47′14.26″ west longitude) for a distance of 75 m upstream from Flora Lake.
13	A portion of an unnamed tributary stream to Flora Lake, Newfoundland and Labrador	A portion of an unnamed tributary stream to Flora Lake, Newfoundland and Labrador. More precisely, an area extending from the mouth of the stream (52°52′10.70″ north latitude, 66°47′6.49″ west longitude) for a distance of 580 m upstream from Flora Lake.
14	A portion of an unnamed tributary stream to Flora Lake, Newfoundland and Labrador	A portion of an unnamed tributary stream to Flora Lake, Newfoundland and Labrador. More precisely, an area extending from the mouth of the stream (52°52′57.45″ north latitude, 66°47′25.23″ west longitude) for a distance of 256 m upstream from Flora Lake.

Article	Colonne 1 Eaux ou lieux	Colonne 2 Description
7	L'étang d'amont d'un tributaire du ruisseau Gill, Terre-Neuve-et-Labrador	L'étang d'amont d'un tributaire du ruisseau Gill, situé par 48°38′29,599 584″ de latitude N. et 56°30′15,560 676″ de longitude O., dans la partie centrale ouest de Terre-Neuve et, plus précisément, la région délimitée par : **a)** la courbe de niveau à 260 m autour de l'étang; **b)** la décharge de l'étang.
8	Le nord-ouest du bras du lac Second Portage, Nunavut	La partie du nord-ouest du bras du lac Second Portage, située par 65°1′39,29″ de latitude N. et 96°3′43″ de longitude O., à environ 80 km au nord de la ville de Baker Lake, au Nunavut et, plus précisément, la région délimitée par : **a)** la courbe de niveau à 146 m autour du bras; **b)** la digue construite à l'extrémité sud-est du bras.
9	Lac Tail, Nunavut	Le lac Tail, situé par 68°7′25,8″ de latitude N. et 106°33′31,2″ de longitude O., à environ 125 km au sud-ouest de la ville de Cambridge Bay, au Nunavut et, plus précisément, la région délimitée par : **a)** la courbe de niveau à 33,5 m autour du lac; **b)** les digues construites aux extrémités sud et nord du lac.
10	Une partie du lac Wabush, Terre-Neuve-et-Labrador	La partie du lac Wabush, située près des villes de Labrador City et de Wabush dans la partie ouest du Labrador, et, plus précisément, la région délimitée par : **a)** la limite sud s'étendant de 53° de latitude N. et 66°50′24″ de longitude O., à 53° de latitude N. et 66°52′57″ de longitude O.; **b)** la décharge du lac Wabush, s'étendant de 53°09′4,7″ de latitude N. et 66°47′3,5″ de longitude O., à 53°08′57,5″ de latitude N. et 66°47′2,9″ de longitude O.
11	Lac Flora, Terre-Neuve-et-Labrador	Le lac Flora, situé par 52°55′ de latitude N. et 66°49′ de longitude O., près des villes de Labrador City et de Wabush dans la partie ouest du Labrador.
12	Une partie d'un ruisseau sans nom tributaire du lac Flora, Terre-Neuve-et-Labrador	La partie d'un ruisseau sans nom tributaire du lac Flora, Terre-Neuve-et-Labrador, et, plus précisément, la région s'étendant de l'embouchure du ruisseau (52°52′9,94″ de latitude N., 66°47′14,26″ de longitude O.) sur une distance de 75 m en amont du lac Flora.
13	Une partie d'un ruisseau sans nom tributaire du lac Flora, Terre-Neuve-et-Labrador	La partie d'un ruisseau sans nom tributaire du lac Flora, Terre-Neuve-et-Labrador, et, plus précisément, la région s'étendant de l'embouchure du ruisseau (52°52′10,70″ de latitude N., 66°47′6,49″ de longitude O.) sur une distance de 580 m en amont du lac Flora.

Item	Column 1 Water or Place	Column 2 Description
15	Sandy Pond, Newfoundland and Labrador	Sandy Pond, located at 47°25′33″ north latitude and 53°46′52″ west longitude, on the Avalon Peninsula, approximately 3 km east southeast of the town of Long Harbour-Mount Arlington Heights, Newfoundland and Labrador. More precisely, the area bounded by **(a)** the contour of elevation around Sandy Pond at the 137 m level, and **(b)** the dams built at the north end of Sandy Pond.
16	A portion of King Richard Creek, British Columbia	A portion of King Richard Creek, located approximately 60 km southwest of the town of Mackenzie, British Columbia. More precisely, a 3.3 km portion of the creek extending northwards and upstream from the centre of a dam constructed at 55°06′42″ north latitude and 123°59′29″ west longitude, to the centre of a dam constructed at 55°07′52″ north latitude and 124°00′50″ west longitude.
17	A portion of an unnamed tributary to Alpine Lake, British Columbia	A portion of an unnamed tributary to Alpine Lake, located approximately 60 km southwest of the town of Mackenzie, British Columbia. More precisely, a 900 m portion of the tributary extending southwards and upstream from the centre of a dam constructed at 55°08′19″ north latitude and 124°00′27″ west longitude, to the centre of a dam constructed at 55°07′59″ north latitude and 124°01′00″ west longitude.
18	A portion of an unnamed tributary to Alpine Lake, British Columbia	A portion of an unnamed tributary to Alpine Lake, located approximately 60 km southwest of the town of Mackenzie, British Columbia. More precisely, a 590 m portion of the tributary extending southwards and upstream from the centre of a dam constructed at 55°08′18″ north latitude and 124°00′41″ west longitude, to the centre of a dam constructed at 55°08′09″ north latitude and 124°01′08″ west longitude.
19	Mallard Lake, Saskatchewan	Mallard Lake, located at 56°00′32″ north latitude and 104°16′38″ west longitude, approximately 120 km northeast of the town of La Ronge, Saskatchewan. More precisely, the area bounded by **(a)** the contour of elevation around Mallard Lake at the 490 m level, and **(b)** the dam built at the south end of Mallard Lake.
20	The unnamed headwater pond of an unnamed tributary of East Creek, Ontario	An unnamed headwater pond of an unnamed tributary of East Creek, located at 50°02′17″ north latitude and 79°40′57″ west longitude, approximately 145 km northeast of the town of Cochrane, Ontario.

Article	Colonne 1 Eaux ou lieux	Colonne 2 Description
14	Une partie d'un ruisseau sans nom tributaire du lac Flora, Terre-Neuve-et-Labrador	La partie d'un ruisseau sans nom tributaire du lac Flora, Terre-Neuve-et-Labrador, et, plus précisément, la région s'étendant de l'embouchure du ruisseau (52°52′57,45″ de latitude N., 66°47′25,23″ de longitude O.) sur une distance de 256 m en amont du lac Flora.
15	Sandy Pond, Terre-Neuve-et-Labrador	L'étang Sandy Pond, situé par 47°25′33″ de latitude N. et 53°46′52″ de longitude O., dans la péninsule Avalon, à environ 3 km est-sud-est de la ville de Long Harbour-Mount Arlington Heights, Terre-Neuve-et-Labrador, et, plus précisément, la région délimitée par : **a)** la courbe de niveau à 137 m autour de l'étang Sandy Pond; **b)** les digues construites à l'extrémité nord de l'étang Sandy Pond.
16	Une partie du ruisseau King Richard, Colombie-Britannique	La partie du ruisseau King Richard située à environ 60 km au sud-ouest de la ville de Mackenzie en Colombie-Britannique, et, plus précisément, la partie du ruisseau qui s'étend sur 3,3 km vers le nord et en amont du centre du barrage situé par 55°06′42″ de latitude N. et 123°59′29″ de longitude O. jusqu'au centre du barrage situé par 55°07′52″ de latitude N. et 124°00′50″ de longitude O.
17	Une partie d'un affluent sans nom tributaire du lac Alpine, Colombie-Britannique	La partie d'un affluent sans nom tributaire du lac Alpine située à environ 60 km au sud-ouest de la ville de Mackenzie en Colombie-Britannique, et, plus précisément, la partie de l'affluent qui s'étend sur 900 m vers le sud et en amont du centre du barrage situé par 55°08′19″ de latitude N. et 124°00′27″ de longitude O. jusqu'au centre du barrage situé par 55°07′59″ de latitude N. et 124°01′00″ de longitude O.
18	Une partie d'un affluent sans nom tributaire du lac Alpine, Colombie-Britannique	La partie d'un affluent sans nom tributaire du lac Alpine située à environ 60 km au sud-ouest de la ville de Mackenzie en Colombie-Britannique, et, plus précisément, la partie de l'affluent qui s'étend sur 590 m vers le sud et en amont du centre du barrage situé par 55°08′18″ de latitude N. et 124°00′41″ de longitude O. jusqu'au centre du barrage situé par 55°08′09″ de latitude N. et 124°01′08″ de longitude O.
19	Lac Mallard, Saskatchewan	Le lac Mallard, situé par 56°00′32″ de latitude N. et 104°16′38″ de longitude O., à environ 120 km au nord-est de la ville de La Ronge en Saskatchewan et, plus précisément, la région délimitée par : **a)** la courbe de niveau à 490 m autour du lac Mallard; **b)** le barrage construit à l'extrémité sud du lac Mallard.
20	L'étang d'amont sans nom d'un tributaire sans nom du ruisseau East, Ontario	L'étang d'amont sans nom d'un tributaire sans nom du ruisseau East situé par 50°02′17″ de latitude N. et 79°40′57″ de longitude O., à environ 145 km au nord-est de la ville de Cochrane, en Ontario.

Item	Column 1 Water or Place	Column 2 Description
21	A portion of an unnamed tributary to East Creek, Ontario	A portion of an unnamed tributary to East Creek, Ontario, located approximately 145 km northeast of the town of Cochrane, Ontario. More precisely, a 2.3-km portion of the tributary extending northwards and downstream from the outlet of the unnamed headwater pond referred to in item 20, to the centre of a dam constructed at 50°02′43″ north latitude and 79°40′20″ west longitude.
22	A portion of an unnamed tributary to Linden Creek, Ontario	A portion of an unnamed tributary to Linden Creek, Ontario, located approximately 145 km northeast of the town of Cochrane, Ontario. More precisely, a 1.8-km portion of the tributary extending southwards and downstream from the northern perimeter of a waste rock disposal area at 50°00′17″ north latitude and 79°43′37″ west longitude to the southern perimeter of the waste rock disposal area at 49°59′30″ north latitude and 79°43′07″ west longitude.
23	A portion of an unnamed tributary to an unnamed lake in the Linden Creek watershed, Ontario	A portion of an unnamed tributary to an unnamed lake in the Linden Creek watershed, Ontario, located approximately 145 km northeast of the town of Cochrane, Ontario. More precisely, a 1.4-km portion of the tributary extending southwards and downstream from the headwaters of the tributary at 50°00′17″ north latitude and 79°42′39″ west longitude to the southern perimeter of a waste rock disposal area at 49°59′25″ north latitude and 79°42′27″ west longitude.
24	A portion of Trail Creek, British Columbia	A portion of Trail Creek, located approximately 20 km southeast of the community of Iskut, British Columbia. More precisely, a 0.6 km portion of the creek extending southwards and downstream from a natural barrier located at 57°42′59″ north latitude and 129°44′10″ west longitude, to the centre of a dam constructed at 57°42′43″ north latitude and 129°44′20″ west longitude.
25	Lake Hesse, Quebec	Lake Hesse, located at 52°46′21″ north latitude and 67°20′58″ west longitude, approximately 15 km west of the town of Fermont, Quebec. More precisely, the area bounded by **(a)** the contour of elevation around Lake Hesse at the 620 m level, **(b)** the dam built at the north end of Lake Hesse, and **(c)** the control dam built at the south end of Lake Hesse.

Article	Colonne 1 Eaux ou lieux	Colonne 2 Description
21	Une partie d'un tributaire sans nom du ruisseau East, Ontario	La partie d'un tributaire sans nom du ruisseau East située à environ 145 km au nord-est de la ville de Cochrane, en Ontario et, plus précisément, la partie du tributaire qui s'étend sur 2,3 km vers le nord et en aval de la décharge de l'étang d'amont sans nom visé à l'article 20 de la présente annexe, jusqu'au centre du barrage situé par 50°02′43″ de latitude N. et 79°40′20″ de longitude O.
22	Une partie d'un tributaire sans nom du ruisseau Linden, Ontario	La partie d'un tributaire sans nom du ruisseau Linden situé à environ 145 km au nord-est de la ville de Cochrane, en Ontario et, plus précisément, la partie du tributaire qui s'étend sur 1,8 km vers le sud et en aval du périmètre nord d'une aire de décharge de stériles située par 50°00′17″ de latitude N. et 79°43′37″ de longitude O., jusqu'au périmètre sud de l'aire de décharge de stériles située par 49°59′30″ de latitude N. et 79°43′07″ de longitude O.
23	Une partie d'un tributaire sans nom d'un lac sans nom du bassin hydrographique du ruisseau Linden, Ontario	La partie d'un tributaire sans nom d'un lac sans nom du bassin hydrographique du ruisseau Linden située à environ 145 km au nord-est de la ville de Cochrane, en Ontario et, plus précisément, la partie du tributaire qui s'étend sur 1,4 km vers le sud et en aval des eaux d'amont du tributaire située par 50°00′17″ de latitude N. et 79°42′39″ de longitude O., jusqu'au périmètre sud d'une aire de décharge de stériles située par 49°59′25″ de latitude N. et 79°42′27″ de longitude O.
24	Une partie du ruisseau Trail, Colombie-Britannique	Une partie du ruisseau Trail situé en Colombie-Britannique à environ 20 km au sud-est de la communauté d'Iskut et, plus précisément, la partie du ruisseau qui s'étend sur 0,6 km vers le sud et en aval de la barrière naturelle située par 57°42′59″ de latitude N. et 129°44′10″ de longitude O. jusqu'au centre du barrage situé par 57°42′43″ de latitude N. et 129°44′20″ de longitude O.
25	Le lac Hesse, Québec	Le lac Hesse, situé par 52°46′21″ de latitude N. et 67°20′58″ de longitude O., à environ 15 km à l'ouest de la ville de Fermont, au Québec, et, plus précisément, la région délimitée par : **a)** la courbe de niveau à 620 m autour du lac Hesse; **b)** le barrage construit à l'extrémité nord du lac Hesse; **c)** le barrage de régulation construit à l'extrémité sud du lac Hesse.

Item	Column 1 Water or Place	Column 2 Description
26	An unnamed lake approximately 20 km west of Fermont, Quebec and a portion of its outlet	An unnamed lake, located at 52°49′43″ north latitude and 67°22′23″ west longitude, approximately 20 km west of the town of Fermont, Quebec, and a portion of its outlet. More precisely, the area bounded by **(a)** the contour of elevation around the lake at the 660 m level, and **(b)** the outlet of the lake extending from the mouth of an outlet stream at 52°49′33″ north latitude and 67°22′18″ west longitude for a distance of 30 m downstream from that mouth.
27	A portion of an unnamed stream discharging waters from an unnamed lake, other than the one referred to in item 26, approximately 20 km west of Fermont, Quebec	A portion of an unnamed stream discharging waters from an unnamed lake, other than the one referred to in item 26, approximately 20 km west of the town of Fermont, Quebec. More precisely, the 1815 m portion of the stream that extends southwards and downstream from the point located at 52°50′02″ north latitude and 67°21′29″ west longitude to the point located at 52°49′20″ north latitude and 67°21′39″ west longitude.
28	A portion of South Teigen Creek, British Columbia	A portion of South Teigen Creek, located approximately 65 km northwest of Stewart, British Columbia. More precisely, an 8.1-km portion of the creek extending northwestwards and downstream from the point located at 56°37′53″ north latitude and 129°54′44″ west longitude to the centre of a dam located at 56°40′11.57″ north latitude and 129°58′20.92″ west longitude.
29	A portion of North Treaty Creek, British Columbia	A portion of North Treaty Creek, located approximately 65 km northwest of Stewart, British Columbia. More precisely, a 3.3-km portion of the creek extending southwards and downstream from the headwaters of the creek located at 56°37′34″ north latitude and 129°54′50″ west longitude to the centre of a dam located at 56°35′54.24″ north latitude and 129°51′25.31″ west longitude.
30	An unnamed watercourse that is a tributary to Lake Jean, located approximately 25 km southeast of Chibougamau, Quebec	The unnamed watercourse that is a tributary to Lake Jean, located approximately 25 km southeast of the town of Chibougamau, Quebec, beginning at the unnamed pond located at 49°47′58″ north latitude and 74°01′38″ west longitude and extending northwards and downstream for a distance of 6.4 km to the centre of the dam constructed at 49°49′29″ north latitude and 74°03′07″ west longitude.
31	A portion of an unnamed watercourse that is a tributary to the watercourse referred to in item 30	A portion of an unnamed watercourse beginning at that watercourse's point of confluence with the watercourse referred to in item 30, which confluence is located at 49°47′57″ north latitude and 74°03′25″ west longitude, and extending for a distance of 1 km northwards and upstream from that point.

Article	Colonne 1 Eaux ou lieux	Colonne 2 Description
26	Un lac sans nom situé à environ 20 km à l'ouest de Fermont, Québec et une partie de sa décharge	Un lac sans nom, situé par 52°49′43″ de latitude N. et 67°22′23″ de longitude O., à environ 20 km à l'ouest de la ville de Fermont, au Québec, et une partie de sa décharge, et, plus précisément, la région délimitée par : **a)** la courbe de niveau à 660 m autour du lac; **b)** la décharge du lac s'étendant de l'embouchure de l'émissaire situé par 52°49′33″ de latitude N. et 67°22′18″ de longitude O., sur une distance de 30 m en aval de son embouchure.
27	Une partie d'un ruisseau sans nom évacuant les eaux d'un lac sans nom, autre que celui mentionné à l'article 26, situé à environ 20 km à l'ouest de Fermont, Québec	Une partie d'un ruisseau sans nom évacuant les eaux d'un lac sans nom, autre que celui mentionné à l'article 26, situé à environ 20 km à l'ouest de la ville de Fermont, au Québec, et, plus précisément, la partie du ruisseau s'étendant sur une distance de 1815 m, au sud et en aval à partir du point situé par 52°50′02″ de latitude N. et 67°21′29″ de longitude O. jusqu'au point situé par 52°49′20″ de latitude N. et 67°21′39″ de longitude O.
28	Une partie du ruisseau South Teigen, Colombie-Britannique	La partie du ruisseau South Teigen située à environ 65 km au nord-ouest de Stewart, en Colombie-Britannique, et, plus précisément, la partie du ruisseau qui s'étend sur 8,1 km vers le nord-ouest et en aval d'un point situé par 56°37′53″ de latitude N. et 129°54′44″ de longitude O. jusqu'au centre d'un barrage situé par 56°40′11,57″ de latitude N. et 129°58′20,92″ de longitude O.
29	Une partie du ruisseau North Treaty, Colombie-Britannique	La partie du ruisseau North Treaty située à environ 65 km au nord-ouest de Stewart, en Colombie-Britannique, et, plus précisément, la partie du ruisseau qui s'étend sur 3,3 km vers le sud et en aval des eaux d'amont du ruisseau situé par 56°37′34″ de latitude N. et 129°54′50″ de longitude O. jusqu'au centre d'un barrage situé par 56°35′54,24″ de latitude N. et 129°51′25,31″ de longitude O.
30	Un cours d'eau sans nom tributaire du lac Jean, situé à environ 25 km au sud-est de Chibougamau, Québec	Le cours d'eau sans nom tributaire du lac Jean, situé à environ 25 km au sud-est de la ville de Chibougamau, au Québec, débutant à l'étang sans nom situé par 49°47′58″ de latitude N. et 74°01′38″ de longitude O. et s'étendant vers le nord et en aval sur une distance de 6,4 km jusqu'au centre du barrage situé par 49°49′29″ de latitude N. et 74°03′07″ de longitude O.
31	Une partie d'un cours d'eau sans nom tributaire du cours d'eau visé à l'article 30	La partie d'un cours d'eau sans nom débutant au point de confluence de celui-ci avec le cours d'eau visé à l'article 30 situé par 49°47′57″ de latitude N. et 74°03′25″ de longitude O. et s'étendant vers le nord et en amont de ce point sur une distance de 1 km.
32	Une partie d'un cours d'eau sans nom tributaire du cours d'eau visé à l'article 30	La partie du cours d'eau sans nom débutant au point situé par 49°48′06″ de latitude N. et 74°03′41″ de longitude O. et s'étendant vers le nord et en aval de ce point sur une distance de 740 m jusqu'au point de confluence avec le cours d'eau visé à l'article 30 situé par 49°48′25″ de latitude N. et 74°03′25″ de longitude O.

Item	Column 1 Water or Place	Column 2 Description
32	A portion of an unnamed watercourse that is a tributary to the watercourse referred to in item 30	A portion of an unnamed watercourse beginning at a point located at 49°48′06″ north latitude and 74°03′41″ west longitude and extending for a distance of 740 m northwards and downstream from that point to the point of confluence with the watercourse referred to in item 30, which confluence is located at 49°48′25″ north latitude and 74°03′25″ west longitude.
33	An unnamed pond east of Lake Bernadette, Quebec, and a portion of its outlet	An unnamed pond located at 49°48′43″ north latitude and 74°04′01″ west longitude and a portion of its outlet extending from the mouth of the outlet located at 49°48′47″ north latitude and 74°03′59″ west longitude for a distance of 190 m northwards and downstream from that mouth.
34	A portion of an unnamed creek (locally known as Loslo Creek), and of its unnamed tributaries, that is tributary to Pinewood River, Ontario	A portion of an unnamed creek (locally known as Loslo Creek), and of its unnamed tributaries, that is tributary to Pinewood River, located approximately 65 km northwest of the town of Fort Frances, Ontario. More precisely, the portion extending southwards and downstream from the northernmost point of the creek at 48°53′6″ north latitude and 94°2′43″ west longitude to the point located at 48°50′24″ north latitude and 94°3′36″ west longitude.
35	A portion of an unnamed creek (locally known as Marr Creek), and of its unnamed tributaries, that is tributary to Pinewood River, Ontario	A portion of an unnamed creek (locally known as Marr Creek), and of its unnamed tributaries, that is tributary to Pinewood River, located approximately 65 km northwest of the town of Fort Frances, Ontario. More precisely, the portion extending southwards and downstream from the northernmost point of the creek at 48°52′12″ north latitude and 94°1′49″ west longitude to the point located at 48°51′18″ north latitude and 94°2′25″ west longitude.
36	A portion of an unnamed creek (locally known as Marr Creek), other than the portion referred to in item 35, that is tributary to Pinewood River, Ontario	A portion of an unnamed creek (locally known as Marr Creek), other than the portion referred to in item 35, that is tributary to Pinewood River, located approximately 65 km northwest of the town of Fort Frances, Ontario. More precisely, the portion extending southwards and downstream from the point located at 48°50′52″ north latitude and 94°2′11″ west longitude, for a distance of 1.85 km, to the point located at 48°49′53″ north latitude and 94°2′24″ west longitude.
37	A portion of an unnamed stream and its unnamed tributaries located approximately 25 km northwest of the town of Amos, Quebec	A portion of an unnamed stream and its unnamed tributaries located approximately 25 km northwest of the town of Amos, Quebec. More precisely, the 4.6 km portion of the stream extending from the point located at 48°40′44.00″ north latitude and 78°29′12.68″ west longitude to the point located at 48°40′7.19″north latitude and 78°28′1.52″ west longitude and covering an area of 3.4 ha.

Article	Colonne 1 Eaux ou lieux	Colonne 2 Description
33	Un étang sans nom à l'est du lac Bernadette, Québec, et une partie de sa décharge	Un étang sans nom situé par 49°48′43″ de latitude N. et 74°04′01″ de longitude O. et une partie de sa décharge s'étendant de l'embouchure de celle-ci située par 49°48′47″ de latitude N. et 74°03′59″ de longitude O. sur une distance de 190 m vers le nord en aval de son embouchure.
34	Une partie d'un ruisseau sans nom (connu localement sous le nom de ruisseau Loslo) et de ses tributaires sans nom, qui est tributaire de la rivière Pinewood, Ontario	La partie d'un ruisseau sans nom (connu localement sous le nom de ruisseau Loslo) et de ses tributaires sans nom, qui est tributaire de la rivière Pinewood, située à environ 65 km au nord-ouest de la ville de Fort Frances, en Ontario, et, plus précisément, la partie qui s'étend vers le sud et en aval du point le plus au nord du ruisseau situé par 48°53′6″ de latitude N. et 94°2′43″ de longitude O., jusqu'au point situé par 48°50′24″ de latitude N. et 94°3′36″ de longitude O.
35	Une partie d'un ruisseau sans nom (connu localement sous le nom de ruisseau Marr) et de ses tributaires sans nom, qui est tributaire de la rivière Pinewood, Ontario	La partie d'un ruisseau sans nom (connu localement sous le nom de ruisseau Marr) et de ses tributaires sans nom, qui est tributaire de la rivière Pinewood, située à environ 65 km au nord-ouest de la ville de Fort Frances, en Ontario, et, plus précisément, la partie qui s'étend vers le sud et en aval du point le plus au nord du ruisseau situé par 48°52′12″ de latitude N. et 94°1′49″ de longitude O., jusqu'au point situé par 48°51′18″ de latitude N. et 94°2′25″ de longitude O.
36	Une partie d'un ruisseau sans nom (connu localement sous le nom de ruisseau Marr), autre que la partie mentionnée à l'article 35, qui est tributaire de la rivière Pinewood, Ontario	La partie d'un ruisseau sans nom (connu localement sous le nom de ruisseau Marr), autre que la partie mentionnée à l'article 35, qui est tributaire de la rivière Pinewood, située à environ 65 km au nord-ouest de la ville de Fort Frances, en Ontario, et, plus précisément, la partie qui s'étend vers le sud et en aval du point situé par 48°50′52″ de latitude N. et 94°2′11″ de longitude O., sur une distance de 1,85 km, jusqu'au point situé par 48°49′53″ de latitude N. et 94°2′24″ de longitude O.
37	Une partie d'un ruisseau sans nom, et ses tributaires sans nom, située à environ 25 km au nord-ouest de la ville d'Amos, Québec	La partie d'un ruisseau sans nom, et ses tributaires sans nom, située à environ 25 km au nord-ouest de la ville d'Amos, au Québec, et, plus précisément, la partie du ruisseau qui s'étend sur 4,6 km à partir du point situé par 48°40′44,00″ de latitude N. et 78°29′12,68″ de longitude O. jusqu'au point situé par 48°40′7,19″ de latitude N. et 78°28′1,52″ de longitude O. et qui couvre une superficie de 3,4 ha.
38	Une partie d'un tributaire sans nom du Petit lac du Portage, Québec	La partie d'un tributaire sans nom du Petit lac du Portage située à environ 15 km au nord-ouest de la ville de Sept-Îles, au Québec. Plus précisément, la partie qui s'étend sur 465 m vers le sud-ouest et en amont du point situé par 50°16′00,90″ de latitude N. et 66°33′42,71″ de longitude O. jusqu'au point situé par 50°16′06,00″ de latitude N. et 66°33′31,55″ de longitude O. et qui couvre une superficie de 0,233 ha.

Item	Column 1 Water or Place	Column 2 Description
38	A portion of an unnamed tributary to Petit lac du Portage, Quebec	A portion of an unnamed tributary to Petit lac du Portage located approximately 15 km northwest of the town of Sept-Îles, Quebec. More precisely, the 465 m portion of the tributary to Petit lac du Portage extending southwest and upstream from the point located at 50°16′00.90″ north latitude and 66°33′42.71″ west longitude to the point located at 50°16′06.00″ north latitude and 66°33′31.55″ west longitude and covering an area of 0.233 ha.
39	An unnamed headwater pond of ruisseau Clet and its unnamed tributaries, Quebec	An unnamed headwater pond of ruisseau Clet located at 50°15′15.82″ north latitude and 66°33′13.6″ west longitude and covering an area of 2.486 ha, approximately 15 km northwest of the town of Sept-Îles, Quebec, and **(a)** a 471 m portion of its unnamed tributary extending upstream from the point located at 50°15′18.37″ north latitude and 66°33′24.01″ west longitude to the point located at 50°15′20.27″ north latitude and 66°33′13.51″ west longitude and covering an area of 0.117 ha; and **(b)** a 76 m portion of its unnamed tributary extending upstream from the point located at 50°15′11.97″ north latitude and 66°33′22.57″ west longitude to the point located at 50°15′12.82″ north latitude and 66°33′20.66″ west longitude and covering an area of 0.033 ha.
40	A portion of ruisseau Clet and its unnamed tributaries, Quebec	A portion of ruisseau Clet, and its unnamed tributaries, located approximately 15 km northwest of the town of Sept-Îles, Quebec. More precisely, the 1897 m portion of ruisseau Clet extending southeast and downstream from the outlet of the unnamed headwater pond referred to in item 39 to the point on ruisseau Clet located at 50°15′11.26″ north latitude and 66°32′15.99″ west longitude and covering an area of 0.850 ha.
41	An unnamed watercourse that is a tributary to Rivière Hall, Quebec	An unnamed watercourse that is composed of interconnected streams and ponds and is a tributary to Rivière Hall and located approximately 15 km northwest of the town of Sept-Îles, Quebec. More precisely, the 910 m portion of the unnamed watercourse extending downstream from the point located at 50°14′52.33″ north latitude and 66°33′27.75″ west longitude to the point located at 50°14′39.67″ north latitude and 66°32′45.74″ west longitude and covering an area of 3.619 ha.

Article	Colonne 1 Eaux ou lieux	Colonne 2 Description
39	Un étang d'amont sans nom du ruisseau Clet et ses tributaires sans nom, Québec	L'étang d'amont sans nom du ruisseau Clet qui est situé par 50°15′15,82″ de latitude N. et 66°33′13,6″ de longitude O. et qui couvre une superficie de 2,486 ha, à environ 15 km au nord-ouest de la ville de Sept-Îles, au Québec, et : **a)** la partie de son tributaire sans nom qui s'étend sur 471 m en amont du point situé par 50°15′18,37″ de latitude N. et 66°33′24,01″ de longitude O. jusqu'au point situé par 50°15′20,27″ de latitude N. et 66°33′13,51″ de longitude O. et qui couvre une superficie de 0,117 ha; **b)** la partie de son tributaire sans nom qui s'étend sur 76 m en amont du point situé par 50°15′11,97″ de latitude N. et 66°33′22,57″ de longitude O. jusqu'au point situé par 50°15′12,82″ de latitude N. et 66°33′20,66″ de longitude O. et qui couvre une superficie de 0,033 ha.
40	Une partie du ruisseau Clet et ses tributaires sans nom, Québec	La partie du ruisseau Clet, et ses tributaires sans nom, située à environ 15 km au nord-ouest de la ville de Sept-Îles, au Québec, et, plus précisément, la partie du ruisseau qui s'étend sur 1 897 m vers le sud-est et en aval de la décharge de l'étang d'amont sans nom visé à l'article 39 jusqu'au point du ruisseau situé par 50°15′11,26″ de latitude N. et 66°32′15,99″ de longitude O. et qui couvre une superficie de 0,850 ha.
41	Un cours d'eau sans nom tributaire de la rivière Hall, Québec	Le cours d'eau sans nom qui est composé de ruisseaux et d'étangs interconnectés, qui est tributaire de la rivière Hall et qui est situé à environ 15 km au nord-ouest de la ville de Sept-Îles, au Québec. Plus précisément, la partie du cours d'eau sans nom qui s'étend sur 910 m en aval du point situé par 50°14′52,33″ de latitude N. et 66°33′27,75″ de longitude O. jusqu'au point situé par 50°14′39,67″ de latitude N. et 66°32′45,74″ de longitude O. et qui couvre une superficie de 3,619 ha.
42	Des parties d'un ruisseau sans nom, Québec	Les deux parties d'un ruisseau sans nom situées à environ 15 km au nord-ouest de la ville de Sept-Îles, au Québec, et, plus précisément : **a)** la partie ouest du ruisseau qui s'étend sur 253 m du point situé par 50°15′18,78″ de latitude N. et 66°29′52,43″ de longitude O. jusqu'au point situé par 50°15′13,76″ de latitude N. et 66°29′46,60″ de longitude O. et qui couvre une superficie de 0,0585 ha; **b)** la partie est du ruisseau qui s'étend sur 267 m du point situé par 50°15′19,58″ de latitude N. et 66°29′45,99″ de longitude O. jusqu'au point situé par 50°15′14,18″ de latitude N. et 66°29′45,19″ de longitude O. et qui couvre une superficie de 0,0555 ha.
43	Lac Davidson, Ontario	Le lac Davidson, situé par 47°56′0,3″ de latitude N. et 80°42′52,68″ de longitude O., à environ 3 km à l'ouest du canton de Matachewan, en Ontario.

Item	Column 1 Water or Place	Column 2 Description
42	Portions of an unnamed creek, Quebec	Two portions of an unnamed creek located approximately 15 km northwest of the town of Sept-Îles, Quebec. More precisely, **(a)** the west portion of the creek extending for a distance of 253 m from the point located at 50°15′18.78″ north latitude and 66°29′52.43″ west longitude to the point located at 50°15′13.76″ north latitude and 66°29′46.60″ west longitude and covering 0.0585 ha; and **(b)** the east portion of the creek extending for a distance of 267 m from the point located at 50°15′19.58″ north latitude and 66°29′45.99″ west longitude to the point located at 50°15′14.18″ north latitude and 66°29′45.19″ west longitude and covering 0.0555 ha.
43	Davidson Lake, Ontario	Davidson Lake, located at 47°56′0.3″ north latitude and 80°42′52.68″ west longitude, approximately 3 km west of the township of Matachewan, Ontario.
44	All waters located within the area described in column 2, located approximately 15 km west of Fermont, Quebec	The waters located within an area located approximately 15 km west of the town of Fermont, Quebec. More precisely, the area bounded by 12 straight lines connecting 12 points starting at the point located at 52°50′7.003″ north latitude and 67°24′37.670″ west longitude to the point located 1663.7 m to the southeast at 52°50′0.527″ north latitude and 67°23′9.420″ west longitude to the point located 99.8 m southeast at 52°49′58.858″ north latitude and 67°23′4.849″ west longitude to the point located 1041.6 m northeast at 52°50′16.401″ north latitude and 67°22′17.322″ west longitude to the point located 2931.3 m southeast at 52°49′14.652″ north latitude and 67°20′18.454″ west longitude to the point located 1116.2 m southwest at 52°48′54.699″ north latitude and 67°21′8.259″ west longitude to the point located 2600 m northwest at 52°49′28.689″ north latitude and 67°23′15.237″ west longitude to the point located 1332 m southwest at 52°49′22.360″ north latitude and 67°24′25.623″ west longitude to the point located 2752.5 m southeast at 52°48′0.645″ north latitude and 67°23′27.147″ west longitude to the point located 640 m southwest at 52°47′48.090″ north latitude and 67°23′54.322″ west longitude to the point located 2267.36 m northwest at 52°47′54.530″ north latitude and 67°25′54.901″ west longitude to the point located 1142.3 m northwest at 52°48′31.230″ north latitude and 67°26′2.164″ west longitude and ending at the point located 3355.9 m northeast at 52°50′7.003″ north latitude and 67°24′37.670″ west longitude.
45	A portion of an unnamed canal located approximately 15 km west of Fermont, Quebec	A portion of an unnamed canal located approximately 15 km west of the town of Fermont, Quebec. More precisely, the 1383 m portion of the canal extending southeast from the point located at 52°47′48.090″ north latitude and 67°23′54.322″ west longitude to the point located at 52°47′20.635″ north latitude and 67°22′56.004″ west longitude.

Article	Colonne 1 Eaux ou lieux	Colonne 2 Description
44	Toutes les eaux comprises dans la région décrite à la colonne 2, située à environ 15 km à l'ouest de Fermont, Québec	Les eaux comprises dans une région située à environ 15 km à l'ouest de la ville de Fermont, au Québec. Plus précisément, la région délimitée par douze lignes droites reliant douze points, à partir du point situé par 52°50′7,003″ de latitude N. et 67°24′37,670″ de longitude O., de là, allant vers le sud-est sur une distance de 1663,7 m jusqu'au point situé par 52°50′0,527″ de latitude N. et 67°23′9,420″ de longitude O., de là, allant vers le sud-est sur une distance de 99,8 m jusqu'au point situé par 52°49′58,858″ de latitude N. et 67°23′4,849″ de longitude O., de là, allant vers le nord-est sur une distance de 1041,6 m jusqu'au point situé par 52°50′16,401″ de latitude N. et 67°22′17,322″ de longitude O., de là, allant vers le sud-est sur une distance de 2931,3 m jusqu'au point situé par 52°49′14,652″ de latitude N. et 67°20′18,454″ de longitude O., de là, allant vers le sud-ouest sur une distance de 1116,2 m jusqu'au point situé par 52°48′54,699″de latitude N. et 67°21′8,259″ de longitude O., de là, allant vers le nord-ouest sur une distance de 2600 m jusqu'au point situé par 52°49′28,689″ de latitude N. et 67°23′15,237″ de longitude O., de là, allant vers le sud-ouest sur une distance de 1332 m jusqu'au point situé par 52°49′22,360″ de latitude N. et 67°24′25,623″ de longitude O., de là, allant vers le sud-est sur une distance de 2752,5 m jusqu'au point situé par 52°48′0,645″ de latitude N. et 67°23′27,147″ de longitude O., de là, allant vers le sud-ouest sur une distance de 640 m jusqu'au point situé par 52°47′48,090″ de latitude N. et 67°23′54,322″ de longitude O., de là, allant vers le nord-ouest sur une distance de 2267,36 m jusqu'au point situé par 52°47′54,530″ de latitude N. et 67°25′54,901″ de longitude O., de là, allant vers le nord-ouest sur une distance de 1142,3 m jusqu'au point situé par 52°48′31,230″ de latitude N. et 67°26′2,164″ de longitude O., de là, allant vers le nord-est sur une distance de 3355,9 m jusqu'au point situé par 52°50′7,003″ de latitude N. et 67°24′37,670″ de longitude O.
45	Une partie d'un canal sans nom, situé à environ 15 km à l'ouest de Fermont, Québec	La partie d'un canal sans nom situé à environ 15 km à l'ouest de la ville de Fermont, au Québec. Plus précisément, la partie du canal s'étendant sur une distance de 1383 m vers le sud-est à partir du point situé par 52°47′48,090″ de latitude N. et 67°23′54,322″ de longitude O. jusqu'au point situé par 52°47′20,635″ de latitude N. et 67°22′56,004″ de longitude O.

Item	Column 1 Water or Place	Column 2 Description
46	All waters located within the area described in column 2, located approximately 15 km west of Fermont, Quebec	The waters located within an area located approximately 15 km west of the town of Fermont, Quebec. More precisely, the area bounded by 10 straight lines connecting 10 points starting at the point located at 52°44′14.968″ north latitude and 67°18′31.354″ west longitude to the point located 939.5 m northeast at 52°44′30.414″ north latitude and 67°17′48.213″ west longitude to the point located 1953.6 m northeast at 52°44′52.900″ north latitude and 67°16′10.857″ west longitude to the point located 441.38 m southeast at 52°44′39.901″ north latitude and 67°16′1.106″ west longitude to the point located 1547.48 m southwest at 52°43′55.611″ north latitude and 67°16′39.714″ west longitude to the point located 769.69 m southwest at 52°43′53.983″ north latitude and 67°17′20.688″ west longitude to the point located 778.84 m southwest at 52°43′32.957″ north latitude and 67°17′43.574″ west longitude to the point located 76.9 m northwest at 52°43′33.669″ north latitude and 67°17′47.500″ west longitude to the point located 667.76 m southwest at 52°43′12.872″ north latitude and 67°17′57.155″ west longitude to the point located 195.7 m northwest at 52°43′14.311″ north latitude and 67°18′7.310″ west longitude to the point located 1928 m northwest and ending at the point located at 52°44′14.968″ north latitude and 67°18′31.354″ west longitude.
47	A portion of Bird Brook and its tributaries, New Brunswick	A portion of Bird Brook and its tributaries, located approximately 60 km northwest of the town of Fredericton, New Brunswick. More precisely, the 8.4 km portion of the brook and tributaries extending from the point located at 46°23′36.89″ north latitude and 67°04′56.42″ west longitude and the point located at 46°22′59.28″ north latitude and 67°04′07.28″ west longitude to the point located eastwards and downstream at 46°23′09.94″ north latitude and 67°02′45.29″ west longitude and covering an area of 1.72 ha.
48	A portion of an unnamed tributary to West Branch Napadogan Brook, New Brunswick	A portion of an unnamed tributary to West Branch Napadogan Brook, located approximately 60 km northwest of the town of Fredericton, New Brunswick. More precisely, the 155 m portion of the tributary extending from the point located at 46°24′01.62″ north latitude and 67°03′39.14″ west longitude to the point located eastwards and downstream at 46°23′58.12″ north latitude and 67°03′34.44″ west longitude and covering an area of 0.02 ha.

Article	Colonne 1 Eaux ou lieux	Colonne 2 Description
46	Toutes les eaux comprises dans la région décrite à la colonne 2, située à environ 15 km à l'ouest de Fermont, Québec	Les eaux comprises dans une région située à environ 15 km à l'ouest de la ville de Fermont, au Québec. Plus précisément, la région délimitée par dix lignes droites reliant dix points, à partir du point situé par 52°44′14,968″ de latitude N. et 67°18′31,354″ de longitude O., de là, allant vers le nord-est sur une distance de 939,5 m jusqu'au point situé par 52°44′30,414″de latitude N. et 67°17′48,213″ de longitude O., de là, allant vers le nord-est sur une distance de 1953,6 m jusqu'au point situé par 52°44′52,900″ de latitude N. et 67°16′10,857″ de longitude O., de là, allant vers le sud-est sur une distance de 441,38 m jusqu'au point situé par 52°44′39,901″ de latitude N. et 67°16′1,106″ de longitude O., de là, allant vers le sud-ouest sur une distance de 1547,48 m jusqu'au point situé par 52°43′55,611″ de latitude N. et 67°16′39,714″ de longitude O., de là, allant vers le sud-ouest sur une distance de 769,69 m jusqu'au point situé par 52°43′53,983″ de latitude N. et 67°17′20,688″ de longitude O., de là, allant vers le sud-ouest sur une distance de 778,84 m jusqu'au point situé par 52°43′32,957″ de latitude N. et 67°17′43,574″ de longitude O., de là, allant vers le nord-ouest sur une distance de 76,9 m jusqu'au point situé par 52°43′33,669″ de latitude N. et 67°17′47,500″ de longitude O., de là, allant vers le sud-ouest sur une distance de 667,76 m jusqu'au point situé par 52°43′12,872″ de latitude N. et 67°17′57,155″ de longitude O., de là, allant vers le nord-ouest sur une distance de 195,7 m jusqu'au point situé par 52°43′14,311″ de latitude N. et 67°18′7,310″ de longitude O., de là, allant vers le nord-ouest sur une distance de 1928 m jusqu'au point situé par 52°44′14,968″ de latitude N. et 67°18′31,354″ de longitude O.
47	Une partie du ruisseau Bird et ses tributaires, Nouveau-Brunswick	La partie du ruisseau Bird, et ses tributaires, située à environ 60 km au nord-ouest de la ville de Fredericton au Nouveau-Brunswick. Plus précisément, la partie qui s'étend sur 8,4 km du point situé par 46°23′36,89″ de latitude N. et 67°04′56,42″ de longitude O. et du point situé par 46°22′59,28″ de latitude N. et 67°04′07,28″ de longitude O. vers un point situé à l'est et en aval par 46°23′09,94″ de latitude N. et 67°02′45,29″ de longitude O. et qui couvre une superficie de 1,72 ha.
48	Une partie du tributaire sans nom du ruisseau West Branch Napadogan, Nouveau-Brunswick	La partie du tributaire sans nom du ruisseau West Branch Napadogan, située à environ 60 km au nord-ouest de la ville de Fredericton au Nouveau-Brunswick. Plus précisément, la partie qui s'étend sur 155 m du point situé par 46°24′01,62″ de latitude N. et 67°03′39,14″ de longitude O. vers un point situé à l'est et en aval par 46°23′58,12″ de latitude N. et 67°03′34,44″ de longitude O. et qui couvre une superficie de 0,02 ha.

Item	Column 1 Water or Place	Column 2 Description
49	All waters located within the area described in column 2, located approximately 9 km southeast of the township of Dubreuilville, Ontario	The waters located within an area located approximately 9 km southeast of the township of Dubreuilville, Ontario. More precisely, the area bounded by five straight lines connecting five points starting at the point located at 48°17′49.226″ north latitude and 84°29′53.100″ west longitude to the point located 528.5 m to the northeast at 48°17′54.428″ north latitude and 84°29′28.669″ west longitude to the point located 941 m southwest at 48°17′30.407″ north latitude and 84°29′56.752″ west longitude to the point located 315 m southwest at 48°17′25.646″ north latitude and 84°30′10.300″ west longitude to the point located 420.5 m southwest at 48°17′21.475″ north latitude and 84°30′29.717″ west longitude and ending at the point located 1142.1 m northeast at 48°17′49.226″ north latitude and 84°29′53.100″ west longitude.
50	All waters located within the area described in column 2, located approximately 9 km southeast of the township of Dubreuilville, Ontario	The waters located within an area located approximately 9 km southeast of the township of Dubreuilville, Ontario. More precisely, the area bounded by five straight lines connecting five points starting at the point located at 48°17′27.821″ north latitude and 84°29′29.968″ west longitude to the point located 981.6 m to the southeast at 48°16′56.049″ north latitude and 84°29′28.918″ west longitude to the point located 221.7 m southwest at 48°16′48.986″ north latitude and 84°29′30.841″ west longitude to the point located 1062.4 m northwest at 48°16′50.640″ north latitude and 84°30′22.311″ west longitude to the point located 1146.3 m northeast at 48°17′22.053″ north latitude and 84°29′52.707″ west longitude and ending at the point located 501.4 m northeast at 48°17′27.821″ north latitude and 84°29′29.968″ west longitude.
51	All waters located within the area described in column 2, located approximately 9 km southeast of the township of Dubreuilville, Ontario	The waters located within an area located approximately 9 km southeast of the township of Dubreuilville, Ontario. More precisely, the area bounded by four straight lines connecting four points starting at the point located at 48°17′5.633″ north latitude and 84°29′5.605″ west longitude to the point located 306.5 m southeast at 48°16′55.717″ north latitude and 84°29′5.083″ west longitude to the point located 245.7 m northwest at 48°16′58.236″ north latitude and 84°29′16.385″ west longitude to the point located 196.7 m northwest at 48°17′4.263″ north latitude and 84°29′19.471″ west longitude and ending at the point located 289 m northeast at 48°17′5.633″ north latitude and 84°29′5.605″ west longitude.

Article	Colonne 1 Eaux ou lieux	Colonne 2 Description
49	Toutes les eaux comprises dans la région décrite à la colonne 2, située à environ 9 km au sud-est du canton de Dubreuilville, Ontario	Les eaux comprises dans une région située à environ 9 km au sud-est du canton de Dubreuilville, en Ontario. Plus précisément, la région délimitée par cinq lignes droites reliant cinq points, à partir du point situé par 48°17′49,226″ de latitude N. et 84°29′53,100″ de longitude O., de là, allant vers le nord-est sur une distance de 528,5 m jusqu'au point situé par 48°17′54,428″ de latitude N. et 84°29′28,669″ de longitude O., de là, allant vers le sud-ouest sur une distance de 941 m jusqu'au point situé par 48°17′30,407″ de latitude N. et 84°29′56,752″ de longitude O., de là, allant vers le sud-ouest sur une distance de 315 m jusqu'au point situé par 48°17′25,646″ de latitude N. et 84°30′10,300″ de longitude O., de là, allant vers le sud-ouest sur une distance de 420,5 m jusqu'au point situé par 48°17′21,475″ de latitude N. et 84°30′29,717″ de longitude O., de là, allant vers le nord-est sur une distance de 1 142,1 m jusqu'au point situé par 48°17′49,226″ de latitude N. et 84°29′53,100″ de longitude O.
50	Toutes les eaux comprises dans la région décrite à la colonne 2, située à environ 9 km au sud-est du canton de Dubreuilville, Ontario	Les eaux comprises dans une région située à environ 9 km au sud-est du canton de Dubreuilville, en Ontario. Plus précisément, la région délimitée par cinq lignes droites reliant cinq points, à partir du point situé par 48°17′27,821″ de latitude N. et 84°29′29,968″ de longitude O., de là, allant vers le sud-est sur une distance de 981,6 m jusqu'au point situé par 48°16′56,049″ de latitude N. et 84°29′28,918″ de longitude O., de là, allant vers le sud-ouest sur une distance de 221,7 m jusqu'au point situé par 48°16′48,986″ de latitude N. et 84°29′30,841″ de longitude O., de là, allant vers le nord-ouest sur une distance de 1 062,4 m jusqu'au point situé par 48°16′50,640″ de latitude N. et 84°30′22,311″ de longitude O., de là, allant vers le nord-est sur une distance de 1 146,3 m jusqu'au point situé par 48°17′22,053″ de latitude N. et 84°29′52,707″ de longitude O., de là, allant vers le nord-est sur une distance de 501,4 m jusqu'au point situé par 48°17′27,821″ de latitude N. et 84°29′29,968″ de longitude O.
51	Toutes les eaux comprises dans la région décrite à la colonne 2, située à environ 9 km au sud-est du canton de Dubreuilville, Ontario	Les eaux comprises dans une région située à environ 9 km au sud-est du canton de Dubreuilville, en Ontario. Plus précisément, la région délimitée par quatre lignes droites reliant quatre points, à partir du point situé par 48°17′5,633″ de latitude N. et 84°29′5,605″ de longitude O., de là, allant vers le sud-est sur une distance de 306,5 m jusqu'au point situé par 48°16′55,717″ de latitude N. et 84°29′5,083″ de longitude O., de là, allant vers le nord-ouest sur une distance de 245,7 m jusqu'au point situé par 48°16′58,236″ de latitude N. et 84°29′16,385″ de longitude O., de là, allant vers le nord-ouest sur une distance de 196,7 m jusqu'au point situé par 48°17′4,263″ de latitude N. et 84°29′19,471″ de longitude O., de là, allant vers le nord-est sur une distance de 289 m jusqu'au point situé par 48°17′5,633″ de latitude N. et 84°29′5,605″ de longitude O.

Item	Column 1 Water or Place	Column 2 Description
52	All waters located within the area described in column 2, located approximately 9 km southeast of the township of Dubreuilville, Ontario	The waters located within an area located approximately 9 km southeast of the township of Dubreuilville, Ontario. More precisely, the area bounded by eight straight lines connecting eight points starting at the point located at 48°17′55.528″ north latitude and 84°27′49.712″ west longitude to the point located 581.3 m southeast at 48°17′50.542″ north latitude and 84°27′22.518″ west longitude to the point located 915.2 m southwest at 48°17′21.168″ north latitude and 84°27′28.342″ west longitude to the point located 1039.1 m southwest at 48°16′55.207″ north latitude and 84°28′0.398″ west longitude to the point located 458 m southwest at 48°16′48.549″ north latitude and 84°28′20.249″ west longitude to the point located 575.5 m northwest at 48°16′56.999″ north latitude and 84°28′45.128″ west longitude to the point located 439.2 m northeast at 48°17′11.207″ north latitude and 84°28′44.376″ west longitude to the point located 1158.6 m northeast at 48°17′42.340″ north latitude and 84°28′13.026″ west longitude and ending at the point located 629.9 m northeast at 48°17′55.528″ north latitude and 84°27′49.712″ west longitude.
53	All waters located within the area described in column 2, located approximately 400 km southwest of Cambridge Bay, Nunavut	The waters located within an area located approximately 400 km southwest of Cambridge Bay, Nunavut. More precisely, the area bounded by 6 straight lines connecting 6 points starting at the point located at 65°31′34.856″ north latitude and 106°22′58.657″ west longitude to the point located 307 m southeast at 65°31′26.609″ north latitude and 106°22′45.370″ west longitude to the point located 954 m southwest at 65°31′1.982″ north latitude and 106°23′29.979″ west longitude to the point located 586 m southwest at 65°30′44.708″ north latitude and 106°23′48.582″ west longitude to the point located 1675 m northwest at 65°31′32.307″ north latitude and 106°24′50.478″ west longitude and ending at the point located 631 m northeast at 65°31′36.267″ north latitude and 106°24′2.267″ west longitude.
54	A portion of Goldfield Creek, Ontario	A portion of Goldfield Creek that is a tributary to the Southwest Arm of Kenogamisis Lake, located approximately 6.5 km southwest of the town of Geraldton, Ontario. More precisely, the portion extending southwards for a distance of 4,250 m from a point located at 49°39′16.51″ north latitude and 87°0′48.57″ west longitude to a point located at 49°38′5.70″ north latitude and 86°59′54.66″ west longitude.
55	A portion of an unnamed watercourse that is a tributary to Kenogamisis Lake, Ontario	A portion of an unnamed watercourse that is a tributary to Kenogamisis Lake, located approximately 2 km south of the town of Geraldton, Ontario. More precisely, the portion extending northwards for a distance of 520 m from a point located at 49°41′25.74″ north latitude and 86°56′29.62″ west longitude to a point located at 49°41′9.76″ north latitude and 86°56′31.19″ west longitude.

Article	Colonne 1 Eaux ou lieux	Colonne 2 Description
52	Toutes les eaux comprises dans la région décrite à la colonne 2, située à environ 9 km au sud-est du canton de Dubreuilville, Ontario	Les eaux comprises dans une région située à environ 9 km au sud-est du canton de Dubreuilville, en Ontario. Plus précisément, la région délimitée par huit lignes droites reliant huit points, à partir du point situé par 48°17′55,528″ de latitude N. et 84°27′49,712″ de longitude O., de là, allant vers le sud-est sur une distance de 581,3 m jusqu'au point situé par 48°17′50,542″ de latitude N. et 84°27′22,518″ de longitude O., de là, allant vers le sud-ouest sur une distance de 915,2 m jusqu'au point situé par 48°17′21,168″ de latitude N. et 84°27′28,342″ de longitude O., de là, allant vers le sud-ouest sur une distance de 1 039,1 m jusqu'au point situé par 48°16′55,207″ de latitude N. et 84°28′0,398″ de longitude O., de là, allant vers le sud-ouest sur une distance de 458 m jusqu'au point situé par 48°16′48,549″ de latitude N. et 84°28′20,249″ de longitude O., de là, allant vers le nord-ouest sur une distance de 575,5 m jusqu'au point situé par 48°16′56,999″ de latitude N. et 84°28′45,128″ de longitude O, de là, allant vers le nord-est sur une distance de 439,2 m jusqu'au point situé par 48°17′11,207″ de latitude N. et 84°28′44,376″ de longitude O., de là, allant vers le nord-est sur une distance de 1 158,6 m jusqu'au point situé par 48°17′42,340″ de latitude N. et 84°28′13,026″ de longitude O., de là, allant vers le nord-est sur une distance de 629,9 m jusqu'au point situé par 48°17′55,528″ de latitude N. et 84°27′49,712″ de longitude O.
53	Toutes les eaux comprises dans la région décrite à la colonne 2, située à environ 400 km au sud-ouest de Cambridge Bay, Nunavut	Les eaux comprises dans une région située à environ 400 km au sud-ouest de Cambridge Bay, au Nunavut. Plus précisément, la région délimitée par six lignes droites reliant six points, à partir du point situé par 65°31′34,856″ de latitude N. et 106°22′58,657″ de longitude O., de là, allant vers le sud-est sur une distance de 307 m jusqu'au point situé par 65°31′26,609″ de latitude N. et 106°22′45,370″ de longitude O., de là, allant vers le sud-ouest sur une distance de 954 m jusqu'au point situé par 65°31′1,982″ de latitude N. et 106°23′29,979″ de longitude O., de là, allant vers le sud-ouest sur une distance de 586 m jusqu'au point situé par 65°30′44,708″ de latitude N. et 106°23′48,582″ de longitude O., de là, allant vers le nord-ouest sur une distance de 1675 m jusqu'au point situé par 65°31′32,307″ de latitude N. et 106°24′50,478″ de longitude O., de là, allant vers le nord-est sur une distance de 631 m jusqu'au point situé par 65°31′36,267″ de latitude N. et 106°24′2,267″ de longitude O.
54	Une partie du ruisseau Goldfield, Ontario	La partie du ruisseau Goldfield, qui est tributaire du bras sud-ouest du lac Kenogamisis, située à environ 6,5 km au sud-ouest de la ville de Geraldton, en Ontario. Plus précisément, la partie qui s'étend vers le sud sur une distance de 4,250 m du point situé par 49°39′16,51″ de latitude N. et 87°0′48,57″ de longitude O. jusqu'au point situé par 49°38′5,70″ de latitude N. et 86°59′ 54,66″ de longitude O.

Item	Column 1 Water or Place	Column 2 Description
56	A portion of an unnamed watercourse that is a tributary to Kenogamisis Lake, Ontario	A portion of an unnamed watercourse that is a tributary to Kenogamisis Lake located approximately 3 km southeast of the town of Geraldton, Ontario. More precisely, the portion extending northwards for a distance of 480 m from a point located at 49°41′8.93″ north latitude and 86°55′34.64″ west longitude to a point located at 49°40′58.24″ north latitude and 86°55′51.01″ west longitude.
57	A portion of the Southwest Arm tributary to Kenogamisis Lake, Ontario	A portion of the Southwest Arm that is tributary to Kenogamisis Lake located approximately 3 km southwest of the town of Geraldton, Ontario. More precisely, the portion extending southwards for a distance of 260 m from a point located at 49°40′26.86″ north latitude and 86°58′26.73″ west longitude to a point located at 49°40′19.55″ north latitude and 86°58′31.95″ west longitude.
58	A portion of an unnamed watercourse tributary to the Southwest Arm of Kenogamisis Lake, Ontario	A portion of an unnamed watercourse tributary to the Southwest Arm of Kenogamisis Lake, located approximately 5.5 km southwest of the town of Geraldton, Ontario. More precisely, the portion extending eastwards for a distance of 730 m from a point located at 49°39′8.51″ north latitude and 86°58′43.19″ west longitude to a point located at 49°39′8.28″ north latitude and 86°58′22.54″ west longitude.
59	An unnamed pond located approximately 2 km south of Geraldton, Ontario	The unnamed pond located approximately 2 km south of the town of Geraldton, Ontario. More precisely, the unnamed pond located at 49°41′6.55″ north latitude and 86°56′33.77″ west longitude, and covering an area of 3.14 ha.
60	All waters located within the area described in column 2, located approximately 150 km north of Baker Lake, Nunavut	The waters located within an area located approximately 150 km north of Baker Lake, Nunavut. More precisely, the area bounded by five straight lines connecting five points starting at the point located at 65°40′45.1″ north latitude and 96°67′58.5″ west longitude to the point located 778 m to the northwest at 65°41′05.6″ north latitude and 96°68′42.2″ west longitude to the point located 173 m northeast at 65°41′16.2″ north latitude and 96°68′15.2″ west longitude to the point located 1050 m southeast at 65°40′60.6″ north latitude and 96°66′32.7″ west longitude to the point located 168 m southeast at 65°40′45.8″ north latitude and 96°66′26.9″ west longitude and ending at the point located 611 m west at 65°40′45.1″ north latitude and 96°67′58.5″ west longitude.
61	East Beaver Pond, Ontario	East Beaver Pond, located at 47°32′19.24″ north latitude and 81°55′14.03″ west longitude, approximately 20 km from the community of Gogama, Ontario.

Article	Colonne 1 Eaux ou lieux	Colonne 2 Description
55	Une partie d'un cours d'eau sans nom tributaire du lac Kenogamisis, Ontario	La partie d'un cours d'eau sans nom, qui est tributaire du lac Kenogamisis, située à environ 2 km au sud de la ville de Geraldton, en Ontario. Plus précisément, la partie qui s'étend vers le nord sur une distance de 520 m du point situé par 49°41′25,74″ de latitude N. et 86°56′29,62″ de longitude O. jusqu'au point situé par 49°41′9,76″ de latitude N. et 86°56′31,19″ de longitude O.
56	Une partie d'un cours d'eau sans nom tributaire du lac Kenogamisis, Ontario	La partie d'un cours d'eau sans nom, qui est tributaire du lac Kenogamisis, située à environ 3 km au sud-est de la ville de Geraldton, en Ontario. Plus précisément, la partie qui s'étend vers le nord sur une distance de 480 m du point situé par 49°41′8,93″ de latitude N. et 86°55′34,64″ de longitude O. jusqu'au point situé par 49°40′58,24″ de latitude N. et 86°55′51,01″ de longitude O.
57	Une partie du bras sud-ouest tributaire du lac Kenogamisis, Ontario	La partie du bras sud-ouest qui est tributaire du lac Kenogamisis, située à environ 3 km au sud-ouest de la ville de Geraldton, en Ontario. Plus précisément, la partie qui s'étend vers le sud sur une distance de 260 m du point situé par 49°40′26,86″ de latitude N. et 86°58′26,73″ de longitude O. jusqu'au point situé par 49°40′19,55″ de latitude N. et 86°58′31,95″ de longitude O.
58	Une partie d'un cours d'eau sans nom tributaire du bras sud-ouest du lac Kenogamisis, Ontario	La partie d'un cours d'eau sans nom qui est tributaire du bras sud-ouest du lac Kenogamisis, située à environ 5,5 km au sud-ouest de la ville de Geraldton, en Ontario. Plus précisément, la partie qui s'étend vers l'est sur une distance de 730 m du point situé par 49°39′8,51″ de latitude N. et 86°58′43,19″ de longitude O. jusqu'au point situé par 49°39′8,28″ de latitude N. et 86°58′22,54″ de longitude O.
59	Un étang sans nom situé à environ 2 km au sud de Geraldton, Ontario	L'étang sans nom situé à environ 2 km au sud de la ville de Geraldton, en Ontario. Plus précisément, l'étang sans nom situé par 49°41′6,55″ de latitude N. et 86°56′33,77″ de longitude O. et qui couvre une superficie de 3,14 ha.
60	Toutes les eaux comprises dans la région décrite à la colonne 2, située à environ 150 km au nord du lac Baker, Nunavut	Les eaux comprises dans une région située à environ 150 km au nord du lac Baker, au Nunavut. Plus précisément, la région délimitée par cinq lignes droites reliant cinq points, à partir du point situé par 65°40′45,1″ de latitude N. et 96°67′58,5″ de longitude O., de là, allant vers le nord-ouest sur une distance de 778 m jusqu'au point situé par 65°41′05,6″ de latitude N. et 96°68′42,2″ de longitude O., de là, allant vers le nord-est sur une distance de 173 m jusqu'au point situé par 65°41′16,2″ de latitude N. et 96°68′15,2″ de longitude O., de là, allant vers le sud-est sur une distance de 1050 m jusqu'au point situé par 65°40′60,6″ de latitude N. et 96°66′32,7″ de longitude O., de là, allant vers le sud-est sur une distance de 168 m jusqu'au point situé par 65°40′45,8″ de latitude N. et 96°66′26,9″ de longitude O., de là, allant vers l'ouest sur une distance de 611 m jusqu'au point situé par 65°40′45,1″ de latitude N. et 96°67′58,5″ de longitude O.

Item	Column 1 Water or Place	Column 2 Description
62	A tributary of an unnamed lake, located approximately 20 km from Gogama, Ontario	A tributary of an unnamed lake, located approximately 20 km from the community of Gogama, Ontario. More precisely, the portion of the tributary extending southeast from the point located at 47°31′31.54″ north latitude and 81°54′57.84″ west longitude extending downstream to the point located at 47°31′20.35″ north latitude and 81°54′43.63″ west longitude.
63	An unnamed creek from West Beaver Pond to Bagsverd Lake, Ontario	An unnamed creek from West Beaver Pond to Bagsverd Lake, located approximately 20 km from the community of Gogama, Ontario. More precisely, the portion of the creek extending northeast from the point located at 47°33′48.23″ north latitude and 81°57′18.64″ west longitude to the point located at 47°33′55.72″ north latitude and 81°56′49.69″ west longitude.
64	All waters located within the area described in column 2, located approximately 20 km from Gogama, Ontario	The waters located within an area located approximately 20 km southwest of the community of Gogama, Ontario. More precisely, the area bounded by ten straight lines connecting ten points starting at the point located at 47°33′32.74″ north latitude and 81°58′47.71″ west longitude to the point located 835 m to the southeast at 47°33′27.93″ north latitude and 81°58′08.34″ west longitude to the point located 310 m southeast at 47°33′26.15″ north latitude and 81°57′53.72″ west longitude to the point located 273 m northeast at 47°33′32.33″ north latitude and 81°57′44.38″ west longitude to the point located 164 m northwest at 47°33′35.43″ north latitude and 81°57′50.65″ west longitude to the point located 213 m northeast at 47°33′41.03″ north latitude and 81°57′44.71″ west longitude to the point located 134 m southeast at 47°33′38.74″ north latitude and 81°57′39.26″ west longitude to the point located 176 m northeast at 47°33′43.18″ north latitude and 81°57′33.94″ west longitude to the point located 574 m northwest at 47°33′43.36″ north latitude and 81°58′01.41″ west longitude to the point located 444 m northwest at 47°33′45.86″ north latitude and 81°58′22.35″ west longitude to the point located 667 m southwest at 47°33′32.74″ north latitude and 81°58′47.71″ west longitude.

SOR/2006-239, ss. 21 to 23; SOR/2008-216, s. 1; SOR/2009-27, s. 1; SOR/2009-156, s. 2; SOR/2010-250, s. 1; SOR/2011-202, s. 1; SOR/2015-45, s. 1; SOR/2016-87, s. 1; SOR/2016-196, s. 1; SOR/2017-128, s. 1; SOR/2017-129, s. 1; SOR/2017-197, s. 1; SOR/2017-272, s. 1; SOR/2018-100, s. 1; SOR/2018-219, ss. 1(F), 2; SOR/2018-280, s. 1; SOR/2019-245, s. 1; SOR/2020-108, s. 1; SOR/2020-109, s. 1; SOR/2020-110, s. 1; SOR/2020-131, s. 1; SOR/2020-132, s. 1.

Article	Colonne 1 Eaux ou lieux	Colonne 2 Description
61	Étang East Beaver, Ontario	L'étang East Beaver, situé par 47°32′19,24″ de latitude N. et 81°55′14,03″ de longitude O., à environ 20 km de la collectivité de Gogama, en Ontario.
62	Un tributaire d'un lac sans nom, situé à environ 20 km de Gogama, Ontario	Le tributaire d'un lac sans nom, situé à environ 20 km de la collectivité de Gogama, en Ontario. Plus précisément, la partie du tributaire qui s'étend vers le sud-est à partir du point situé par 47°31′31,54″ de latitude N. et 81°54′57,84″ de longitude O. qui s'étend en aval jusqu'au point situé par 47°31′20,35″ de latitude N. et 81°54′43,63″ de longitude O.
63	Un ruisseau sans nom s'étendant de l'étang West Beaver jusqu'au lac Bagsverd, Ontario	Le ruisseau sans nom s'étendant de l'étang West Beaver jusqu'au lac Bagsverd, situé à environ 20 km de la collectivité de Gogama, en Ontario. Plus précisément, la partie du ruisseau qui s'étend vers le nord-est à partir du point situé par 47°33′48,23″ de latitude N. et 81°57′18,64″ de longitude O., jusqu'au point situé par 47°33′55,72″ de latitude N. et 81°56′49,69″ de longitude O.
64	Toutes les eaux comprises dans la région décrite à la colonne 2, située à environ 20 km de Gogama, Ontario	Les eaux comprises dans une région située à environ 20 km au sud-ouest de la collectivité de Gogama, en Ontario. Plus précisément, la région délimitée par dix lignes droites reliant dix points à partir du point situé par 47°33′32,74″ de latitude N. et 81°58′47,71″ de longitude O., de là, allant vers le sud-est sur une distance de 835 m jusqu'au point situé par 47°33′27,93″ de latitude N. et 81°58′08,34″ de longitude O., de là, allant vers le sud-est sur une distance de 310 m jusqu'au point situé par 47°33′26,15″ de latitude N. et 81°57′53,72″ de longitude O., de là, allant vers le nord-est sur une distance de 273 m jusqu'au point situé par 47°33′32,33″ de latitude N. et 81°57′44,38″ de longitude O., de là, allant vers le nord-ouest sur une distance de 164 m jusqu'au point situé par 47°33′35,43″ de latitude N. et 81°57′50,65″ de longitude O., de là, allant vers le nord-est sur une distance de 213 m jusqu'au point situé par 47°33′41,03″ de latitude N. et 81°57′44,71″ de longitude O., de là, allant vers le sud-est sur une distance de 134 m jusqu'au point situé par 47°33′38,74″ de latitude N. et 81°57′39,26″ de longitude O., de là, allant vers le nord-est sur une distance de 176 m jusqu'au point situé par 47°33′43,18″ de latitude N. et 81°57′33,94″ de longitude O., de là, allant vers le nord-ouest sur une distance de 574 m jusqu'au point situé par 47°33′43,36″ de latitude N. et 81°58′01,41″ de longitude O., de là, allant vers le nord-ouest sur une distance de 444 m jusqu'au point situé par 47°33′45,86″ de latitude N. et 81°58′22,35″ de longitude O., de là, allant vers le sud-ouest sur une distance de 667 m jusqu'au point situé par 47°33′32,74″ de latitude N. et 81°58′47,71″ de longitude O.

DORS/2006-239, art. 21 à 23; DORS/2008-216, art. 1; DORS/2009-27, art. 1; DORS/2009-156, art. 2; DORS/2010-250, art. 1; DORS/2011-202, art. 1; DORS/2015-45, art. 1; DORS/2016-87, art. 1; DORS/2016-196, art. 1; DORS/2017-128, art. 1; DORS/2017-129, art. 1; DORS/2017-197, art. 1; DORS/2017-272, art. 1; DORS/2018-100, art. 1; DORS/2018-219, art. 1(F) et 2; DORS/2018-280, art. 1; DORS/2019-245, art. 1; DORS/2020-108, art. 1; DORS/2020-109, art. 1; DORS/2020-110, art. 1; DORS/2020-131, art. 1; DORS/2020-132, art. 1.

SCHEDULE 3

(Subsections 1(1) and 12(2) and subsection 4(2) of Schedule 5)

Analytical Requirements for Metal or Diamond Mining Effluent

TABLE 1

Item	Column 1 Deleterious Substance/pH/ temperature	Column 2 Precision[1]	Column 3 Accuracy[2]	Column 4 Method Detection Limit (MDL)
1	Arsenic	10%	100 ± 10%	0.0025 mg/L
2	Copper	10%	100 ± 10%	0.001 mg/L
3	Cyanide	10%	100 ± 10%	0.005 mg/L
4	Lead	10%	100 ± 10%	0.0005 mg/L
5	Nickel	10%	100 ± 10%	0.0125 mg/L
6	Zinc	10%	100 ± 10%	0.010 mg/L
7	Suspended Solids	15%	100 ± 15%	2.000 mg/L
8	Radium 226	10%	100 ± 10%	0.01 Bq/L
9	Total ammonia	10%	100 ± 10%	0.05 mg/L expressed as nitrogen (N)
10	pH	0.1 pH unit	0.1 pH unit	Not Applicable
11	Temperature	10%	± 0.5 °C	Not Applicable

[1] Relative standard deviation at concentrations 10 times above the MDL.

[2] Analyte recovery at concentrations above 10 times the MDL.

TABLE 2

Item	Column 1 Substances/ hardness/ alkalinity/ electrical conductivity	Column 2 Precision[1]	Column 3 Accuracy[2]	Column 4 Method Detection Limit (MDL)
1	Aluminum	10%	100 ± 10%	0.005 mg/L
2	Cadmium	10%	100 ± 10%	0.000045 mg/L
3	Chloride	10%	100 ± 10%	60 mg/L

ANNEXE 3

(paragraphes 1(1) et 12(2) et paragraphe 4(2) de l'annexe 5)

Exigences analytiques pour les effluents des mines de métaux et des mines de diamants

TABLEAU 1

Article	Colonne 1 Substance nocive/pH/ température	Colonne 2 Précision[1]	Colonne 3 Exactitude[2]	Colonne 4 Limite de détection de la méthode (LDM)
1	Arsenic	10 %	100 ± 10 %	0,0025 mg/L
2	Cuivre	10 %	100 ± 10 %	0,001 mg/L
3	Cyanure	10 %	100 ± 10 %	0,005 mg/L
4	Plomb	10 %	100 ± 10 %	0,0005 mg/L
5	Nickel	10 %	100 ± 10 %	0,0125 mg/L
6	Zinc	10 %	100 ± 10 %	0,010 mg/L
7	Matières en suspension	15 %	100 ± 15 %	2,000 mg/L
8	Radium 226	10 %	100 ± 10 %	0,01 Bq/L
9	Ammoniac total	10 %	100 ± 10 %	0,05 mg/L sous forme d'azote (N)
10	pH	0,1 unité pH	0,1 unité pH	Sans objet
11	Température	10 %	± 0,5 °C	Sans objet

[1] Écart-type relatif à des concentrations dix fois supérieures à la LDM.

[2] Récupération de l'analyte à des concentrations de plus de dix fois la LDM.

TABLEAU 2

Article	Colonne 1 Substance/ dureté/ alcalinité/ conductivité électrique	Colonne 2 Précision[1]	Colonne 3 Exactitude[2]	Colonne 4 Limite de détection de la méthode (LDM)
1	Aluminium	10 %	100 ± 10 %	0,005 mg/L
2	Cadmium	10 %	100 ± 10 %	0,000045 mg/L
3	Chlorure	10 %	100 ± 10 %	60 mg/L

Item	Column 1 Substances/ hardness/ alkalinity/ electrical conductivity	Column 2 Precision[1]	Column 3 Accuracy[2]	Column 4 Method Detection Limit (MDL)
4	Chromium	10%	100 ± 10%	0.00445 mg/L
5	Cobalt	10%	100 ± 10%	0.00125 mg/L
6	Iron	10%	100 ± 10%	0.15 mg/L
7	Manganese	10%	100 ± 10%	0.005 mg/L
8	Mercury	10%	100 ± 10%	0.00001 mg/L
9	Molybdenum	10%	100 ± 10%	0.0365 mg/L
10	Nitrate	10%	100 ± 10%	1.46835 mg/L, expressed as nitrogen (N)
11	Phosphorus	10%	100 ± 10%	0.05 mg/L
12	Selenium	10%	100 ± 10%	0.0005 mg/L
13	Sulphate	10%	100 ± 10%	0.6 mg/L
14	Thallium	10%	100 ± 10%	0.0004 mg/L
15	Uranium	10%	100 ± 10%	0.0075 mg/L
16	Total ammonia	10%	100 ± 10%	0.05 mg/L expressed as nitrogen (N)
17	Hardness	10%	100 ± 10%	1 mg/L
18	Alkalinity	10%	100 ± 10%	2 mg/L
19	Electrical Conductivity	10%	100 ± 10%	1 µS/cm

[1] Relative standard deviation at concentrations 10 times above the MDL.

[2] Analyte recovery at concentrations above 10 times the MDL.

SOR/2006-239, s. 24; SOR/2018-99, s. 31.

Article	Colonne 1 Substance/ dureté/ alcalinité/ conductivité électrique	Colonne 2 Précision[1]	Colonne 3 Exactitude[2]	Colonne 4 Limite de détection de la méthode (LDM)
4	Chrome	10 %	100 ± 10 %	0,00445 mg/L
5	Cobalt	10 %	100 ± 10 %	0,00125 mg/L
6	Fer	10 %	100 ± 10 %	0,15 mg/L
7	Manganèse	10 %	100 ± 10 %	0,005 mg/L
8	Mercure	10 %	100 ± 10 %	0,00001 mg/L
9	Molybdène	10 %	100 ± 10 %	0,0365 mg/L
10	Nitrate	10 %	100 ± 10 %	1,46835 mg/L sous forme d'azote (N)
11	Phosphore	10 %	100 ± 10 %	0,05 mg/L
12	Sélénium	10 %	100 ± 10 %	0,0005 mg/L
13	Sulfate	10 %	100 ± 10 %	0,6 mg/L
14	Thallium	10 %	100 ± 10 %	0,0004 mg/L
15	Uranium	10 %	100 ± 10 %	0,0075 mg/L
16	Ammoniac total	10 %	100 ± 10 %	0,05 mg/L sous forme d'azote (N)
17	Dureté	10 %	100 ± 10 %	1 mg/L
18	Alcalinité	10 %	100 ± 10 %	2 mg/L
19	Conductivité électrique	10 %	100 ± 10 %	1 µS/cm

[1] Écart-type relatif à des concentrations dix fois supérieures à la LDM.

[2] Récupération de l'analyte à des concentrations de plus de dix fois la LDM.

DORS/2006-239, art. 24; DORS/2018-99, art. 31.

SCHEDULE 4

(Paragraph 4(1)(a), subsection 13(1), paragraph 13(3)(a), subparagraph 22(c)(i) and paragraph 24(1)(a))

Authorized Limits of Deleterious Substances

Item	Column 1 Deleterious Substance	Column 2 Maximum Authorized Monthly Mean Concentration	Column 3 Maximum Authorized Concentration in a Composite Sample	Column 4 Maximum Authorized Concentration in a Grab Sample
1	Arsenic	0.50 mg/L	0.75 mg/L	1.00 mg/L
2	Copper	0.30 mg/L	0.45 mg/L	0.60 mg/L
3	Cyanide	1.00 mg/L	1.50 mg/L	2.00 mg/L
4	Lead	0.20 mg/L	0.30 mg/L	0.40 mg/L
5	Nickel	0.50 mg/L	0.75 mg/L	1.00 mg/L
6	Zinc	0.50 mg/L	0.75 mg/L	1.00 mg/L
7	Total Suspended Solids	15.00 mg/L	22.50 mg/L	30.00 mg/L
8	Radium 226	0.37 Bq/L	0.74 Bq/L	1.11 Bq/L

NOTE: All concentrations are total values.

SOR/2006-239, s. 25; SOR/2018-99, s. 32.

ANNEXE 4

(alinéa 4(1)a), paragraphe 13(1), alinéa 13(3)a), sous-alinéa 22c)(i) et alinéa 24(1)a))

Limites permises pour certaines substances nocives

Article	Colonne 1 Substance nocive	Colonne 2 Concentration moyenne mensuelle maximale permise	Colonne 3 Concentration maximale permise dans un échantillon composite	Colonne 4 Concentration maximale permise dans un échantillon instantané
1	Arsenic	0,50 mg/L	0,75 mg/L	1,00 mg/L
2	Cuivre	0,30 mg/L	0,45 mg/L	0,60 mg/L
3	Cyanure	1,00 mg/L	1,50 mg/L	2,00 mg/L
4	Plomb	0,20 mg/L	0,30 mg/L	0,40 mg/L
5	Nickel	0,50 mg/L	0,75 mg/L	1,00 mg/L
6	Zinc	0,50 mg/L	0,75 mg/L	1,00 mg/L
7	Total des solides en suspension	15,00 mg/L	22,50 mg/L	30,00 mg/L
8	Radium 226	0,37 Bq/L	0,74 Bq/L	1,11 Bq/L

NOTE : Toutes les concentrations sont des valeurs totales.

DORS/2006-239, art. 25; DORS/2018-99, art. 32.

SCHEDULE 5

(Subsections 7(1) and (3) and paragraphs 15(1)(a) and (b) and 32(1)(c))

Environmental Effects Monitoring Studies

Interpretation

1 (1) The following definitions apply in this Schedule.

biological monitoring study means a study referred to in section 9. (*étude de suivi biologique*)

effect on fish tissue from mercury means a concentration of total mercury that exceeds 0.5 µg/g wet weight in fish tissue that is taken in an exposure area and that is statistically different from and higher than the concentration of total mercury in fish tissue that is taken in a reference area. (*effet du mercure sur les tissus de poissons*)

effect on the benthic invertebrate community means a statistical difference between data referred to in subparagraph 12(1)(e)(ii) and paragraph 12(1)(f) from a study respecting the benthic invertebrate community conducted in

(a) an exposure area and a reference area; or

(b) sampling areas within an exposure area where there are gradually decreasing effluent concentrations. (*effet sur la communauté d'invertébrés benthiques*)

effect on the fish population means a statistical difference between data relating to the indicators referred to in subparagraph 12(1)(e)(i) from a study respecting fish population conducted in

(a) an exposure area and a reference area; or

(b) sampling areas within an exposure area where there are gradually decreasing effluent concentrations. (*effet sur la population de poissons*)

exposure area means all fish habitat and waters frequented by fish that are exposed to effluent. (*zone exposée*)

fish has the same meaning as in section 2 of the Act but does not include parts of fish, parts of shellfish, parts of crustaceans or parts of marine animals. (*poisson*)

reference area means water frequented by fish that is not exposed to effluent and that has fish habitat that, as far as practicable, is most similar to that of the exposure area. (*zone de référence*)

sampling area means the area within an exposure or reference area where representative samples are collected. (*zone d'échantillonnage*)

ANNEXE 5

(paragraphes 7(1) et (3), alinéas 15(1)a) et b) et 32(1)c))

Études de suivi des effets sur l'environnement

Définitions et interprétation

1 (1) Les définitions qui suivent s'appliquent à la présente annexe.

effet du mercure sur les tissus de poissons Concentration du mercure total dans les tissus de poissons pris dans la zone exposée, supérieure à 0,5 µg/g (poids humide), présentant une différence statistique et ayant une concentration plus élevée par rapport à la concentration du mercure total dans les tissus de poissons pris dans la zone de référence. (*effect on fish tissue from mercury*)

effet sur la communauté d'invertébrés benthiques Différence statistique entre les données visées au sous-alinéa 12(1)e)(ii) et à l'alinéa 12(1)f) d'une étude sur la communauté d'invertébrés benthiques effectuée :

a) soit dans la zone exposée et dans la zone de référence;

b) soit dans les zones d'échantillonnage de la zone exposée qui présentent un gradient décroissant de concentration d'effluent. (*effect on the benthic invertebrate community*)

effet sur la population de poissons Différence statistique entre les données portant sur les indicateurs visés au sous-alinéa 12(1)e)(i) d'une étude sur la population de poissons effectuée :

a) soit dans la zone exposée et dans la zone de référence;

b) soit dans les zones d'échantillonnage de la zone exposée qui présentent un gradient décroissant de concentration d'effluent. (*effect on the fish population*)

étude de suivi biologique Étude visée à l'article 9. (*biological monitoring study*)

poisson S'entend au sens de l'article 2 de la Loi, à l'exclusion des parties de poissons, de mollusques, de crustacés et d'animaux marins. (*fish*)

zone d'échantillonnage Partie de la zone exposée ou de la zone de référence où les échantillons représentatifs sont prélevés. (*sampling area*)

zone de référence Les eaux où vivent des poissons et où se trouve un habitat du poisson, qui ne sont pas exposées à un effluent et qui présentent, dans la mesure du possible, les caractéristiques les plus semblables à celles de la zone exposée. (*reference area*)

(2) For the purpose of this schedule, ***critical effect size***, in relation to an effect indicator set out in column 1 of the following table, means the critical effect size set out in column 2:

Item	Column 1 Effect Indicator	Column 2 Critical Effect Size
	For Fish Population	(% of reference mean)
1	Total body weight at age	± 25%
2	Gonad weight at total body weight	± 25%
3	Liver weight at total body weight	± 25%
4	Total body weight at length (condition)	± 10%
5	Age	± 25%
	For Benthic Invertebrate Community	(Standard Deviation Units)
6	Density	± 2 SD
7	Simpson's Evenness Index	± 2 SD
8	Taxa Richness	± 2 SD

2 Environmental effects monitoring studies consist of the effluent and water quality monitoring studies set out in Part 1 and the biological monitoring studies set out in Part 2.

PART 1

Effluent and Water Quality Monitoring Studies

Required Studies

3 Effluent and water quality monitoring studies consist of effluent characterization, sublethal toxicity testing and water quality monitoring.

zone exposée Les eaux où vivent des poissons et l'habitat du poisson qui sont exposés à un effluent. (*exposure area*)

(2) Pour l'application de la présente annexe, ***seuil critique d'effet*** s'entend, à l'égard d'un indicateur d'effet qui figure dans la colonne 1 du tableau ci-après, du seuil critique d'effet correspondant de la colonne 2 :

Article	Colonne 1 Indicateur d'effet	Colonne 2 Seuil critique d'effet
	Pour la population de poissons	(% par rapport à la moyenne de référence)
1	Poids corporel total selon l'âge	± 25 %
2	Poids des gonades par rapport au poids corporel total	± 25 %
3	Poids du foie par rapport au poids corporel total	± 25 %
4	Poids corporel total par rapport à la longueur (condition)	± 10 %
5	Âge	± 25 %
	Pour la communauté d'invertébrés benthiques	(multiple d'écart type)
6	Densité	± 2 ET
7	Indice de régularité de Simpson	± 2 ET
8	Richesse des taxons	± 2 ET

2 Les études de suivi des effets sur l'environnement se composent des études de suivi de l'effluent et de la qualité de l'eau prévues à la partie 1 et des études de suivi biologique prévues à la partie 2.

PARTIE 1

Études de suivi de l'effluent et de la qualité de l'eau

Composition des études

3 Les études de suivi de l'effluent et de la qualité de l'eau se composent de la caractérisation de l'effluent, des essais de toxicité sublétale et du suivi de la qualité de l'eau.

Effluent Characterization

4 (1) Effluent characterization is conducted by analyzing a sample of effluent and recording the hardness, alkalinity, electrical conductivity and temperature of the sample and the concentrations, in total values, of the following substances:

(a) aluminum;

(b) cadmium;

(c) iron;

(d) subject to subsection (4), mercury;

(e) molybdenum;

(f) selenium;

(g) nitrate (concentration in units of nitrogen);

(h) chloride;

(i) chromium;

(j) cobalt;

(k) sulphate;

(l) thallium;

(m) uranium;

(n) phosphorus (concentration in units of phosphorus);

(o) manganese; and

(p) ammonia (concentration in units of nitrogen).

(2) The analysis shall comply with the analytical requirements set out in Table 2 of Schedule 3.

(3) The effluent characterization shall be conducted once per calendar quarter on an aliquot of effluent sample collected under sections 12 and 13 of these Regulations from each final discharge point at least one month after the sample on which the previous characterization was conducted.

(4) The recording of the concentration of mercury in effluent referred to in paragraph (1)(d) may be discontinued if that concentration is less than 0.10 µg/L in 12 consecutive samples collected under subsection (3).

(5) Quality assurance and quality control measures shall be implemented that will ensure the accuracy of the effluent characterization data.

Caractérisation de l'effluent

4 (1) La caractérisation de l'effluent est effectuée par l'analyse d'un échantillon d'effluent et par l'enregistrement de sa dureté, de son alcalinité, de sa conductivité électrique, de sa température et des concentrations, exprimées en valeurs totales, des substances suivantes :

a) l'aluminium;

b) le cadmium;

c) le fer;

d) sous réserve du paragraphe (4), le mercure;

e) le molybdène;

f) le sélénium;

g) le nitrate (la concentration en unités d'azote);

h) le chlorure;

i) le chrome;

j) le cobalt;

k) le sulfate;

l) le thallium;

m) l'uranium;

n) le phosphore (la concentration en unités de phosphore);

o) le manganèse;

p) l'ammoniac (la concentration en unités d'azote).

(2) Les analyses doivent satisfaire aux exigences analytiques prévues au tableau 2 de l'annexe 3.

(3) La caractérisation de l'effluent est effectuée, une fois par trimestre civil, sur une portion aliquote de l'échantillon d'effluent prélevé à chaque point de rejet final en application des articles 12 et 13 du présent règlement au moins un mois après la caractérisation précédente.

(4) La concentration en mercure n'a plus à être enregistrée aux termes de l'alinéa (1)d) si la concentration de mercure de douze échantillons consécutifs prélevés selon le paragraphe (3) est inférieure à 0,10 µg/L.

(5) Des mesures d'assurance de la qualité et de contrôle de la qualité sont prises pour garantir l'exactitude des données visant la caractérisation de l'effluent.

Sublethal Toxicity Testing

5 (1) Sublethal toxicity testing shall, in the case of effluent deposited into fresh waters, be conducted using the following test methodologies, as amended from time to time:

(a) in the case of a fish species,

(i) *Biological Test Method: Test of Larval Growth and Survival Using Fathead Minnows* (Report EPS 1/RM/22), published by the Department of the Environment, or

(ii) *Biological Test Method: Toxicity Tests Using Early Life Stages of Salmonid Fish (Rainbow Trout)* (Reference Method EPS 1/RM/28), published by the Department of the Environment;

(b) in the case of an invertebrate species, *Biological Test Method: Test of Reproduction and Survival Using the Cladoceran Ceriodaphnia dubia* (Report EPS 1/RM/21), published by the Department of the Environment;

(c) in the case of a plant species, *Biological Test Method: Test for Measuring the Inhibition of Growth Using the Freshwater Macrophyte, Lemna minor* (Reference Method EPS 1/RM/37), published by the Department of the Environment, as it applies to the biological endpoint based on the number of fronds; and

(d) in the case of an algal species,

(i) *Biological Test Method: Growth Inhibition Test Using a Freshwater Alga* (Report EPS 1/RM/25), published by the Department of the Environment, or

(ii) *Détermination de la toxicité : inhibition de la croissance chez l'algue Pseudokirchneriella subcapitata*, (Méthode de référence MA 500 – P. sub. 1.0, rév. 3), published by the Centre d'expertise en analyse environnementale du Québec du ministère du Développement durable, de l'Environnement et de la Lutte contre les changements climatiques du Québec.

(2) Sublethal toxicity testing shall, in the case of effluent deposited into marine or estuarine waters, be conducted for fish species, invertebrate species and algal species using the following test methodologies, as amended from time to time, as applicable to each species:

(a) *Biological Test Method: Fertilization Assay Using Echinoids (Sea Urchins and Sand Dollars)* (Report EPS 1/RM/27), published by the Department of the Environment;

(b) *Short-term Methods for Estimating the Chronic Toxicity of Effluents and Receiving Waters to Marine and Estuarine Organisms* (Reference Method EPA/821/R-02/014), published by the U.S. Environmental Protection Agency; and

Essais de toxicité sublétale

5 (1) Dans le cas d'effluent rejeté dans l'eau douce, les essais de toxicité sublétale sont effectués en conformité avec les méthodes ci-après, avec leurs modifications successives :

a) dans le cas d'une espèce de poissons :

(i) soit la *Méthode d'essai biologique : essai de croissance et de survie sur des larves de tête-de-boule* (Rapport SPE 1/RM/22), publiée par le ministère de l'Environnement,

(ii) soit la *Méthode d'essai biologique : essais toxicologiques sur des salmonidés (truite arc-en-ciel) aux premiers stades de leur cycle biologique* (Méthode de référence SPE 1/RM/28), publiée par le ministère de l'Environnement;

b) dans le cas d'une espèce d'invertébré, la *Méthode d'essai biologique : essai de reproduction et de survie du cladocère Ceriodaphnia dubia* (Rapport SPE 1/RM/21), publiée par le ministère de l'Environnement;

c) dans le cas d'une espèce de plante, la *Méthode d'essai biologique : essai de mesure de l'inhibition de la croissance de la plante macroscopique dulcicole Lemna minor* (Méthode de référence SPE 1/RM/37), publiée par le ministère de l'Environnement et appliquée au paramètre biologique en fonction du nombre de thalles;

d) dans le cas d'une espèce d'algue :

(i) soit la *Méthode d'essai biologique : essai d'inhibition de la croissance d'une algue d'eau douce* (Rapport SPE 1/RM/25), publiée par le ministère de l'Environnement,

(ii) soit la méthode intitulée *Détermination de la toxicité : inhibition de la croissance chez l'algue Pseudokirchneriella subcapitata,* (Méthode de référence MA 500 – P. sub. 1.0, rév. 3), publiée par le Centre d'expertise en analyse environnementale du Québec du ministère du Développement durable, de l'Environnement et de la Lutte contre les changements climatiques du Québec.

(2) Dans le cas d'effluent rejeté dans l'eau de mer ou d'estuaire, les essais de toxicité sublétale sont effectués conformément aux méthodes ci-après, avec leurs modifications successives, à l'égard d'une espèce, selon le cas, de poisson, d'invertébré et d'algue :

a) la *Méthode d'essai biologique : essai sur la fécondation chez les échinides (oursins globuleux et oursins plats)* (Rapport SPE/1/RM/27), publiée par le ministère de l'Environnement;

b) les méthodes intitulées *Short-term Methods for Estimating the Chronic Toxicity of Effluents and Receiving Waters to Marine and Estuarine Organisms* (Méthode de référence EPA/821/R-02/014), publiées par l'Environmental Protection Agency des États-Unis;

(c) *Short-term Methods for Estimating the Chronic Toxicity of Effluent and Receiving Waters to West Coast Marine and Estuarine Organisms* (Reference Method EPA/600/R-95-136), published by the U.S. Environmental Protection Agency.

(3) The sublethal toxicity tests shall be conducted on aliquots of the same effluent sample collected for effluent characterization collected from the mine's final discharge point that has potentially the most adverse environmental impact on the environment, taking into account

(a) the loading of the deleterious substances contained in the effluent as determined under subsection 20(2) of these Regulations; and

(b) the manner in which the effluent mixes within the exposure area.

6 (1) The sublethal toxicity tests shall be conducted on the species referred to in subsections 5(1) and (2) two times each calendar year for three years and each test shall be conducted on an aliquot of effluent sample collected at least one month after the collection of the sample used in the previous tests.

(2) However, if effluent is discharged for 31 consecutive days or less in a calendar year, the tests may be conducted only once in that year.

(3) After three years, the tests shall be conducted once per calendar quarter on the species referred to in subsection 5(1) or (2), as the case may be, whose results for all the tests conducted in accordance with subsections (1) and (2) — including such tests conducted in addition to the number required by those subsections — produce the lowest geometric mean, taking into account the inhibition concentration that produces a 25% effect or an effective concentration of 25%.

Water Quality Monitoring

7 (1) Water quality monitoring is conducted by

(a) collecting samples of water from

(i) the exposure area surrounding the point of entry of effluent into water from each final discharge point and from the related reference areas, and

(ii) the sampling areas that are selected under clauses 10(b)(i)(B) and 10(c)(i)(A);

(b) recording the temperature of the water and the dissolved oxygen concentration in the water in the exposure and reference areas where the samples are collected;

(c) recording the concentration of the substances set out in paragraphs 4(1)(a) to (p) and,

(i) in the case of effluent that is deposited into fresh water, recording the pH, hardness, alkalinity and electrical conductivity of the water samples,

c) les méthodes intitulées *Short-term Methods for Estimating the Chronic Toxicity of Effluents and Receiving Waters to West Coast Marine and Estuarine Organisms* (Méthode de référence EPA/600/R-95-136), publiées par l'Environmental Protection Agency des États-Unis.

(3) Les essais de toxicité sublétale sont effectués sur des portions aliquotes d'un même échantillon d'effluent prélevé pour la caractérisation de l'effluent au point de rejet final de la mine qui représente le plus grand risque de répercussions néfastes sur l'environnement, compte tenu :

a) de la charge des substances nocives se trouvant dans l'effluent, déterminée conformément au paragraphe 20(2) du présent règlement;

b) de la façon dont l'effluent se mélange dans la zone exposée.

6 (1) Les essais de toxicité sublétale sont effectués, à l'égard de chaque espèce visée aux paragraphes 5(1) et (2), à raison de deux fois par année civile pendant trois ans et chaque essai est effectué sur une portion aliquote de l'échantillon d'effluent prélevé au moins un mois après le prélèvement de l'échantillon utilisé pour les essais précédents.

(2) Toutefois, dans le cas de l'effluent rejeté pendant trente et un jours consécutifs ou moins dans une année civile, ces essais peuvent être effectués une fois pour cette année.

(3) Après trois ans, les essais sont effectués une fois par trimestre civil pour l'espèce visée au paragraphe 5(1) ou (2), selon le cas, à l'égard de laquelle les résultats de tous les essais effectués conformément aux paragraphes (1) ou (2) — y compris ceux excédant le nombre d'essais exigés par ces paragraphes — révèlent la moyenne géométrique la plus faible, compte tenu d'une concentration inhibitrice qui produit un effet de 25 % ou d'une concentration effective de 25 %.

Suivi de la qualité de l'eau

7 (1) Le suivi de la qualité de l'eau s'effectue :

a) par prélèvement d'échantillons d'eau :

(i) dans la zone exposée entourant l'endroit où l'effluent rejeté par chaque point de rejet final se mélange à l'eau, et dans les zones de référence connexes,

(ii) dans les zones d'échantillonnage choisies aux termes des divisions 10b)(i)(B) et 10c)(i)(A);

b) par enregistrement de la température de l'eau et de la concentration d'oxygène dissous dans l'eau des zones exposées et des zones de référence où les échantillons sont prélevés;

c) par enregistrement de la concentration des substances énumérées aux alinéas 4(1)a) à p) et :

(i) dans le cas où l'effluent est rejeté dans l'eau douce, par enregistrement du pH, de la dureté, de l'alcalinité et de la conductivité électrique des échantillons d'eau,

(ii) in the case of effluent that is deposited into estuarine waters, recording the pH, hardness, alkalinity, electrical conductivity and salinity of the water samples, and

(iii) in the case of effluent that is deposited into marine waters, recording the salinity of the water samples;

(d) recording the concentration of the deleterious substances prescribed in section 3 of these Regulations, but

(i) not recording the concentrations of cyanide if that substance is not used as a process reagent within the operations area, and

(ii) not recording the concentrations of radium 226 if the conditions of subsection 13(2) of these Regulations are met; and

(e) implementing quality assurance and quality control measures that will ensure the accuracy of water quality monitoring data.

(2) The water quality monitoring shall be conducted

(a) four times per calendar year and at least one month apart on the samples of water collected, while the mine is depositing effluent, from the areas referred to in subparagraph (1)(a)(i); and

(b) at the same time that the biological monitoring studies are conducted on samples of water collected in the areas referred to in subparagraph (1)(a)(ii).

Information Related to Effluent and Water Quality Monitoring Studies

8 The following information in relation to the effluent and water quality monitoring studies conducted during a calendar year under sections 4 to 7 shall be submitted to the Minister of the Environment not later than March 31 of the following year:

(a) the dates on which samples were collected for effluent characterization, sublethal toxicity testing and water quality monitoring;

(b) for each sample collected for effluent characterization, the location of the final discharge point from which samples were collected for effluent characterization;

(c) the location of the final discharge point from which samples were collected for sublethal toxicity testing and the data used in selecting the final discharge point in accordance with subsection 5(3);

(d) the latitude and longitude of sampling areas for water quality monitoring and a description that is sufficient to identify the location of the sampling areas;

(ii) dans le cas où il est rejeté dans l'eau d'estuaire, par enregistrement du pH, de la dureté, de l'alcalinité, de la conductivité électrique et de la salinité des échantillons d'eau,

(iii) dans le cas où il est rejeté dans l'eau de mer, par enregistrement de la salinité des échantillons d'eau;

d) par enregistrement de la concentration des substances nocives désignées à l'article 3 du présent règlement, sous réserve de ce qui suit :

(i) la concentration de cyanure n'est enregistrée que si cette substance est utilisée comme réactif de procédé sur le chantier,

(ii) la concentration de radium 226 n'est pas enregistrée si les conditions mentionnées au paragraphe 13(2) du présent règlement sont remplies;

e) par la prise des mesures d'assurance de la qualité et de contrôle de la qualité pour garantir l'exactitude des données visant le suivi de la qualité de l'eau.

(2) Le suivi de la qualité de l'eau est effectué :

a) quatre fois par année civile et à au moins un mois d'intervalle sur les échantillons d'eau prélevés, lorsque la mine rejette de l'effluent, dans les zones visées au sous-alinéa (1)a)(i);

b) en même temps que les études de suivi biologique, sur les échantillons d'eau prélevés dans les zones visées au sous-alinéa (1)a)(ii).

Renseignements relatifs aux études de suivi de l'effluent et de la qualité de l'eau

8 Les renseignements ci-après, relatifs aux études de suivi de l'effluent et de la qualité de l'eau effectuées au cours d'une année civile en application des articles 4 à 7, sont présentés au ministre de l'Environnement au plus tard le 31 mars de l'année suivante :

a) les dates de prélèvement des échantillons pour la caractérisation de l'effluent, les essais de toxicité sublétale et le suivi de la qualité de l'eau;

b) l'emplacement des points de rejet final où les échantillons sont prélevés pour la caractérisation de l'effluent;

c) l'emplacement du point de rejet final où les échantillons ont été prélevés pour les essais de toxicité sublétale et les données qui ont servi à le sélectionner conformément au paragraphe 5(3);

d) la latitude et la longitude des zones d'échantillonnage utilisées pour le suivi de la qualité de l'eau et une description qui permet de reconnaître l'emplacement de ces zones;

(e) the results of effluent characterization, sublethal toxicity testing and water quality monitoring;

(f) the methodologies used to conduct effluent characterization and water quality monitoring, and the related method detection limits;

(g) a description of the quality assurance and quality control measures that were implemented and the data related to the implementation of those measures; and

(h) with respect to every effluent sample collected at each final discharge point, the annual mean concentration of mercury and selenium.

e) les résultats de la caractérisation de l'effluent, des essais de toxicité sublétale et du suivi de la qualité de l'eau;

f) les méthodes utilisées pour la caractérisation de l'effluent et le suivi de la qualité de l'eau, ainsi que les limites de détection de celles-ci;

g) la description des mesures d'assurance de la qualité et de contrôle de la qualité qui ont été prises ainsi que les données associées à leur mise en œuvre;

h) à l'égard de chaque échantillon d'effluent prélevé à tout point final de rejet, les concentrations moyennes annuelles de mercure et de sélénium.

PART 2

Biological Monitoring Studies

Required Studies

9 (1) Biological monitoring studies shall include

(a) a study respecting fish population, if the highest concentration of effluent in the exposure area, during a period in which there are deposits, is greater than 1% at any location that is 250 m from a point at which the effluent enters the area from a final discharge point, unless the results of the previous two biological monitoring studies indicate

(i) for all effect indicators with no assigned critical effect size, no effect on the fish population, and

(ii) for all effect indicators with an assigned critical effect size, no effect on the fish population or an effect on the fish population the absolute value of the magnitude of which is less than the absolute value of its assigned critical effect size;

(b) a study respecting the benthic invertebrate community, if the highest concentration of effluent in the exposure area, during a period in which there are deposits, is greater than 1% at any location that is 100 m from a point at which the effluent enters the area from a final discharge point, unless the results of the previous two biological monitoring studies indicate

(i) for all effect indicators with no assigned critical effect size, no effect on the benthic invertebrate community, and

(ii) for all effect indicators with an assigned critical effect size, no effect on the benthic invertebrate community or an effect on the benthic invertebrate community the absolute value of the magnitude of which is less than the absolute value of its assigned critical effect size;

(c) a study respecting fish tissue mercury, if

PARTIE 2

Études de suivi biologique

Composition des études

9 (1) Les études de suivi biologique comportent :

a) une étude sur la population de poissons, si la concentration de l'effluent la plus élevée dans une zone exposée, lors d'une période pendant laquelle il y a des rejets, est supérieure à 1 % à tout endroit situé à 250 m du point où l'effluent entre dans la zone depuis un point de rejet final, à moins que les résultats des deux études de suivi biologique précédentes révèlent, à la fois :

(i) à l'égard des indicateurs d'effet pour lesquels il n'y a pas de seuil critique d'effet, qu'il n'y a aucun effet sur la population de poissons,

(ii) à l'égard des indicateurs d'effet pour lesquels il y a un seuil critique d'effet, qu'il n'y a aucun effet sur la population de poissons ou qu'il y a un effet sur la population de poissons, dont la valeur absolue de l'ampleur est inférieure à la valeur absolue du seuil critique d'effet;

b) une étude sur la communauté d'invertébrés benthiques, si la concentration de l'effluent la plus élevée dans une zone exposée, lors d'une période pendant laquelle il y a des rejets, est supérieure à 1 % à tout endroit situé à 100 m d'un point où l'effluent entre dans la zone depuis un point de rejet final, sauf si les résultats des deux études de suivi biologique précédentes révèlent à la fois :

(i) à l'égard des indicateurs d'effet pour lesquels il n'y a pas de seuil critique d'effet, qu'il n'y a aucun effet sur la communauté d'invertébrés benthiques,

(ii) à l'égard des indicateurs pour lesquels il y a un seuil critique d'effet, qu'il n'y a aucun effet sur la communauté d'invertébrés benthiques ou il y a un effet sur la communauté d'invertébrés benthiques, dont la valeur absolue de l'ampleur est inférieure à la valeur absolue du seuil critique d'effet;

(i) effluent characterization reveals an annual mean concentration of total mercury in the effluent that is equal to or greater than 0.10 µg/L, based on a calendar year, unless the results of the previous two biological monitoring studies indicate no effect on fish tissue from mercury, or

(ii) the method detection limit used in respect of mercury for the analysis of at least two of four effluent samples in a calendar year is equal to or greater than 0.10 µg/L;

(d) a study respecting fish tissue selenium, if

(i) effluent characterization reveals a concentration of total selenium in the effluent that is equal to or greater than 10 µg/L,

(ii) effluent characterization reveals an annual mean concentration of total selenium in the effluent that is equal to or greater than 5 µg/L, based on a calendar year, or

(iii) the method detection limit used in respect of selenium for the analysis of any effluent sample is equal to or greater than 10 µg/L, or the method detection limit used in respect of selenium for the analysis of at least two of four effluent samples in a calendar year is equal to or greater than 5 µg/L; and

(e) if the cause of any effect on the fish population, on fish tissue from mercury or on the benthic invertebrate community is not known, a study that will be used to determine the cause of the effect if

(i) the results of the previous two biological monitoring studies indicate a similar type of effect, and

(ii) for an effect indicator with an assigned critical effect size, the absolute value of the magnitude of the effect is equal to or greater than the absolute value of its critical effect size in either of those studies.

(2) If the results of the previous two biological monitoring studies are used to lift the requirement to conduct a study under any of paragraphs (1)(a), (b), (c) or (e), the earlier of those two studies shall not be used to lift a requirement to conduct a subsequent study.

(3) For the purposes of subsection (1), the concentration of effluent shall be determined or the effluent characterization shall be carried out, as the case may be,

(a) in the case of the first biological monitoring studies, beginning on the day on which the mine becomes subject

c) une étude sur le mercure dans les tissus de poissons, si :

(i) soit la caractérisation de l'effluent révèle une concentration annuelle moyenne de mercure total égale ou supérieure à 0,10 µg/L pour une année civile donnée, sauf si les résultats des deux études de suivi biologique précédentes révèlent qu'il n'y a aucun effet du mercure sur les tissus de poissons,

(ii) soit la limite de détection de la méthode utilisée, à l'égard du mercure, pour l'analyse d'au moins deux échantillons d'effluent sur quatre pour une année civile donnée est égale ou supérieure à 0,10 µg/L;

d) une étude sur le sélénium dans les tissus de poissons, si :

(i) soit la caractérisation de l'effluent révèle une concentration de sélénium total égale ou supérieure à 10 µg/L,

(ii) soit la caractérisation de l'effluent révèle une concentration annuelle moyenne de sélénium total égale ou supérieure à 5 µg/L pour une année civile donnée,

(iii) soit la limite de détection de la méthode utilisée, à l'égard du sélénium, pour l'analyse de tout échantillon d'effluent est égale ou supérieure à 10 µg/L ou la limite de détection de la méthode utilisée, à l'égard du sélénium, pour l'analyse d'au moins deux échantillons d'effluent sur quatre pour une année civile donnée est égale ou supérieure à 5 µg/L;

e) si la cause d'un effet sur la population de poissons, d'un effet du mercure sur les tissus de poissons ou d'un effet sur la communauté d'invertébrés benthiques n'est pas connue, une étude qui sera utilisée pour établir la cause de l'effet si, à la fois :

(i) les résultats des deux études de suivi biologique précédentes indiquent un type d'effet semblable,

(ii) à l'égard de tout indicateur d'effet pour lequel un seuil critique d'effet est prévu, la valeur absolue de l'ampleur de l'effet est égale ou supérieure à la valeur absolue du seuil critique d'effet, dans l'une ou l'autre de ces deux études précédentes.

(2) Si les résultats des deux études de suivi biologique précédentes sont utilisés pour lever l'obligation de présenter une étude en application des alinéas (1)a), b), c) ou e), celle qui est antérieure à l'autre ne peut être utilisée pour lever l'obligation de présenter une étude subséquente.

(3) Pour l'application du paragraphe (1), la concentration de l'effluent est déterminée — et la caractérisation de l'effluent est effectuée — selon les périodes suivantes :

a) dans le cas des premières études de suivi biologique, à partir de la date à laquelle la mine est assujettie à l'article 7 du présent règlement et jusqu'au jour qui précède la date à laquelle le premier plan d'étude doit être présenté;

to section 7 of these Regulations and ending on the day before the day on which the first study design is required to be submitted; and

(b) for any subsequent biological monitoring studies, beginning on the day on which the previous study design was required to be submitted and ending on the day before the day on which the subsequent study design is required to be submitted.

b) pour les études de suivi biologique subséquentes, à partir de la date à laquelle le plan d'étude précédent devait être présenté et jusqu'au jour qui précède la date à laquelle le plan d'étude subséquent doit être présenté.

DIVISION 1

First Biological Monitoring Studies

First Study Design

10 A first study design shall be submitted to the Minister of the Environment not later than 12 months after the day on which a mine becomes subject to section 7 of these Regulations. It shall contain

(a) a site characterization that includes

(i) a description of the manner in which the effluent mixes within each exposure area, during a period in which there are deposits, including an estimate of the concentration of effluent in the exposure area at 100 m and 250 m from every point at which the effluent enters the area from a final discharge point and — in respect of each calendar year — any supporting data, including raw data, for the estimate,

(ii) a description of the exposure and reference areas where the biological monitoring studies would be conducted — whether or not they are required — that includes information on the geological, hydrological, oceanographical, limnological, chemical and biological features of those areas,

(iii) the type of production process used by the mine and the environmental protection practices in place at the mine,

(iv) a description of any anthropogenic, natural or other factors that are not related to the effluent but that may reasonably be expected to affect the results of any biological monitoring study, whether or not it is required, and

(v) any additional information that would enable a determination as to whether studies would be conducted in accordance with generally accepted standards of good scientific practice;

(b) a description of how any required study respecting fish population, fish tissue mercury and fish tissue selenium will be conducted that includes

(i) a description of and the scientific rationale for

SECTION 1

Premières études de suivi biologique

Premier plan d'étude

10 Un premier plan d'étude est présenté au ministre de l'Environnement au plus tard douze mois après la date à laquelle la mine devient assujettie à l'article 7 du présent règlement et comporte :

a) la caractérisation du site comportant :

(i) une description de la façon dont l'effluent se mélange dans chaque zone exposée, lors d'une période pendant laquelle il y a des rejets, notamment une estimation de la concentration de l'effluent à 100 m et à 250 m de chaque point où l'effluent entre dans la zone depuis un point de rejet final ainsi que, à l'égard de toute année civile, toute donnée justificative à l'appui de l'estimation, y compris les données brutes,

(ii) une description des zones exposées et des zones de référence, si une étude de suivi biologique serait menée, qu'elle soit exigée ou non, y compris les renseignements sur les caractéristiques géologiques, hydrologiques, océanographiques, limnologiques, chimiques et biologiques de ces zones,

(iii) le type de procédé de production utilisé par la mine et les pratiques de protection de l'environnement appliquées à la mine,

(iv) les facteurs anthropiques, naturels ou autres non liés à l'effluent, mais dont on peut raisonnablement s'attendre à ce qu'ils affectent les résultats de toute étude de suivi biologique, qu'elle soit exigée ou non,

(v) tout renseignement supplémentaire qui permet de déterminer si des études seraient effectuées conformément aux normes généralement reconnues régissant les bonnes pratiques scientifiques;

b) la description du déroulement de l'étude portant sur la population de poissons, sur le mercure dans les tissus de poissons ou sur le sélénium dans les tissus de poissons, si une telle étude est exigée :

(i) les éléments ci-après, y compris les motifs scientifiques à l'appui :

(A) the fish species selected, taking into account the abundance of the species most exposed to effluent,

(B) the sampling areas selected within the exposure area and the reference area,

(C) the sampling period selected,

(D) the sample size selected, and

(E) the field and laboratory methodologies selected, and

(ii) an explanation as to how, in the case of the study respecting fish population or fish tissue mercury, the study will provide the information necessary to determine if the effluent has an effect on fish population or on fish tissue from mercury;

(c) a description of how any required study respecting the benthic invertebrate community will be conducted that includes

(i) a description of and the scientific rationale for

(A) the sampling areas selected, taking into account the benthic invertebrate diversity and the area most exposed to effluent,

(B) the sampling period selected,

(C) the sample size selected, and

(D) the field and laboratory methodologies selected, and

(ii) an explanation as to how the study will provide the information necessary to determine if the effluent has an effect on the benthic invertebrate community;

(d) the month in which the samples will be collected for each required biological monitoring study;

(e) a description of the quality assurance and quality control measures that will be implemented for each required biological monitoring study to ensure the validity of the data that is collected; and

(f) a summary of the results of any studies to determine whether the effluent was causing an effect on the fish population, fish tissue from mercury or the benthic invertebrate community and of any studies in the exposure and reference areas respecting fish tissue selenium completed before the mine becomes subject to section 7 of these Regulations and any scientific data to support the results.

(A) les espèces de poissons choisies, compte tenu de l'abondance des espèces les plus exposées à l'effluent,

(B) les zones d'échantillonnage choisies de la zone exposée et de la zone de référence,

(C) la période d'échantillonnage choisie,

(D) la taille des échantillons choisie,

(E) les méthodes choisies sur le terrain et en laboratoire,

(ii) dans le cas de l'étude sur la population de poissons ou de l'étude sur le mercure dans les tissus de poissons, la façon dont l'étude fournira les renseignements permettant de déterminer si l'effluent a un effet sur la population de poissons ou un effet du mercure sur les tissus de poissons;

c) la description du déroulement de toute étude sur la communauté d'invertébrés benthiques exigée, notamment :

(i) une description des éléments ci-après, y compris les motifs scientifiques à l'appui :

(A) les zones d'échantillonnage choisies, compte tenu de la diversité des invertébrés benthiques et de la zone la plus exposée à l'effluent,

(B) la période d'échantillonnage choisie,

(C) la taille des échantillons choisie,

(D) les méthodes choisies sur le terrain et en laboratoire,

(ii) la façon dont l'étude fournira les renseignements permettant de déterminer si l'effluent a un effet sur la communauté d'invertébrés benthiques;

d) le mois pendant lequel les échantillons seront prélevés pour toute étude de suivi biologique exigée;

e) la description des mesures d'assurance de la qualité et de contrôle de la qualité pour toute étude de suivi biologique exigée qui seront prises pour garantir la validité des données recueillies;

f) un résumé des résultats de toute étude qui indique si l'effluent produit un effet sur les populations de poissons, un effet du mercure sur les tissus de poissons ou un effet sur la communauté d'invertébrés benthiques et de toute étude sur le sélénium dans les tissus de poissons dans la zone exposée et de référence, effectuées avant la date à laquelle la mine devient assujettie à l'article 7 du présent règlement, ainsi que toutes données scientifiques justificatives.

First Biological Monitoring Studies

11 (1) Subject to subsection (2), the first biological monitoring studies shall start not earlier than six months after the day on which the first study design is submitted under section 10, and shall be conducted in accordance with that study design.

(2) If the owner or operator is unable to follow the study design due to circumstances beyond their control, the owner or operator shall inform the Minister of the Environment without delay of those circumstances and of the changes that are made to the study.

First Interpretative Report

12 (1) A first interpretative report shall be submitted to the Minister of the Environment not later than 36 months after the day on which the mine becomes subject to section 7 of these Regulations. It shall contain

(a) a description of any deviation from the study design that occurred while the biological monitoring studies were being conducted and any impact that the deviation had on the studies;

(b) the latitude and longitude of sampling areas and a description of the sampling areas sufficient to identify the location of the sampling areas;

(c) the dates and times when samples were collected;

(d) the sample sizes;

(e) the mean, median, standard deviation, standard error and minimum and maximum values in the sampling areas for

(i) in the case of the study respecting fish population, effect indicators of growth, reproduction, condition and survival that include, if practicable, the length, total body weight and age of the fish, the weight of its liver or hepatopancreas and, if the fish are sexually mature, the egg weight, fecundity and gonad weight of the fish,

(ii) in the case of the study respecting the benthic invertebrate community, effect indicators of the total benthic invertebrate density, evenness index, taxa richness and, if the study is conducted in an area where it is possible to sample sediment, total organic carbon content of sediment and particle size distribution of sediment,

(iii) in the case of the study respecting fish tissue mercury, the effect indicator of the concentration of total mercury (wet weight) in the fish tissue, and

(iv) in the case of the study respecting fish tissue selenium, the concentration — in the muscle or whole body and, if practicable, in the ovaries or eggs — of total selenium (dry weight) reported in µg/g and the percentage of the moisture content of the sample;

Premières études de suivi biologique

11 (1) Les premières études de suivi biologique débutent au plus tôt six mois après la date à laquelle le premier plan d'étude a été présenté en application de l'article 10 et sont effectuées conformément à ce plan.

(2) Toutefois, si le propriétaire ou l'exploitant est incapable de suivre le plan d'étude pour des raisons indépendantes de sa volonté, il en avise sans délai le ministre de l'Environnement et l'informe des modifications à apporter aux modalités du déroulement de l'étude.

Premier rapport d'interprétation

12 (1) Un premier rapport d'interprétation est présenté au ministre de l'Environnement au plus tard trente-six mois après la date à laquelle la mine devient assujettie à l'article 7 du présent règlement et comporte :

a) la description de tout écart par rapport au plan d'étude qui s'est produit durant les études de suivi biologique et l'incidence de ces écarts sur les études;

b) la latitude et la longitude des zones d'échantillonnage et une description qui permet de reconnaître l'emplacement de ces zones;

c) les dates et heures de prélèvement des échantillons;

d) la taille des échantillons;

e) la moyenne, la médiane, l'écart-type, l'erreur-type ainsi que les valeurs minimales et maximales dans les zones d'échantillonnage quant aux éléments suivants :

(i) dans le cas de l'étude sur la population de poissons, les indicateurs d'effet qui portent sur la croissance des poissons, leur reproduction, leur condition et leur survie qui comprennent, dans la mesure du possible, la longueur, le poids corporel total, l'âge, le poids du foie ou de l'hépatopancréas et, si les poissons ont atteint la maturité sexuelle, le poids des œufs, le taux de fécondité et le poids des gonades,

(ii) dans le cas de l'étude sur la communauté d'invertébrés benthiques, les indicateurs d'effet qui portent sur la densité totale des invertébrés benthiques, l'indice de régularité, la richesse des taxons et, si des sédiments peuvent être prélevés à l'endroit où s'effectue l'étude, la teneur en carbone organique total des sédiments et la distribution granulométrique de ceux-ci,

(iii) dans le cas de l'étude sur le mercure dans les tissus de poissons, l'indicateur d'effet portant sur la concentration de mercure total (poids humide) dans les tissus,

(iv) dans le cas de l'étude sur le sélénium dans les tissus de poissons, la concentration — dans les muscles ou le corps et, dans la mesure du possible, les ovaires ou

(f) in the case of the study respecting the benthic invertebrate community, a calculation of the similarity index effect indicator;

(g) an identification of the sex of the fish sampled and of the presence of any lesions, tumours, parasites or other abnormalities and, in the case of the study respecting fish tissue selenium, the type of fish tissue studied and the scientific rationale for the selection of that tissue;

(h) a determination as to whether there is a statistically significant difference between the sampling areas for the calculations under subparagraphs (e)(i) to (iii) and paragraph (f) taking into consideration the information identified under paragraph (g), with the statistical comparison made separately and independently for each effect indicator;

(i) a statistical analysis of the results of the calculations under subparagraphs (e)(i) to (iii) and paragraph (g) that indicates the probability of correctly detecting an effect of a pre-defined size and the degree of confidence that can be placed in the calculations;

(j) for an effect indicator referred to in paragraph (e) with an assigned critical effect size, a comparison of the magnitude of the effect — calculated in accordance with subsection (2) or (3), as the case may be — to its critical effect size;

(k) any supporting data, including raw data, for the information provided under paragraphs (e) to (j);

(l) a description of any quality assurance or quality control measures that were implemented and the data related to the implementation of those measures;

(m) based on the information referred to in paragraphs (e) to (k), the identification of

(i) any effect on the fish population,

(ii) any effect on the benthic invertebrate community, and

(iii) any effect on fish tissue from mercury;

(n) for an effect indicator with an assigned critical effect size, a statement as to whether the absolute value of the magnitude of the effect is equal to or greater than the absolute value of its critical effect size;

(o) a summary of the results of effluent characterization, sublethal toxicity testing and water quality monitoring reported under paragraph 8(e) beginning on the day on which the mine becomes subject to section 7 of these Regulations;

(p) the conclusions of the biological monitoring studies, and a description of how those conclusions will impact the study design for subsequent biological monitoring studies, taking into account

les œufs — de sélénium total (poids sec), rapportée en µg/g, et le pourcentage d'humidité de l'échantillon;

f) dans le cas de l'étude sur la communauté d'invertébrés benthiques, le calcul de l'indicateur d'effet portant sur l'indice de similitude;

g) l'identification du sexe des poissons pris et la présence de lésions, de tumeurs, de parasites et d'autres anomalies et, dans le cas de l'étude sur le sélénium dans les tissus de poissons, le type de tissu étudié ainsi que les motifs scientifiques à l'appui du choix de tissu;

h) l'établissement à savoir s'il existe une différence statistique significative entre les zones d'échantillonnage pour les calculs effectués en application des sous-alinéas e)(i) à (iii) et de l'alinéa f) et eu égard aux renseignements visés à l'alinéa g), selon une comparaison statistique séparée et indépendante pour chaque indicateur d'effet;

i) une analyse statistique des résultats des calculs effectués en application des sous-alinéas e)(i) à (iii) et de l'alinéa g) qui indique la probabilité de détection correcte d'un effet d'une ampleur prédéterminée ainsi que le degré de confiance pouvant être accordé aux calculs;

j) une comparaison de l'ampleur de l'effet — calculée conformément aux paragraphes (2) ou (3) — par rapport au seuil critique d'effet d'un indicateur d'effet visé par l'alinéa e) et pour lequel il y a un seuil critique d'effet;

k) toute donnée justificative à l'appui, y compris les données brutes, relatives aux renseignements visés aux alinéas e) à j);

l) la description des mesures d'assurance de la qualité et de contrôle de la qualité qui ont été prises ainsi que les données associées à leur mise en œuvre;

m) selon les renseignements visés aux alinéas e) à k), l'indication de tout :

(i) effet sur la population de poissons,

(ii) effet sur la communauté d'invertébrés benthiques,

(iii) effet du mercure sur les tissus de poissons;

n) à l'égard de tout indicateur d'effet, un énoncé à savoir si la valeur absolue de l'ampleur de l'effet est égale ou supérieure à la valeur absolue du seuil critique d'effet prévu pour cet indicateur d'effet;

o) un résumé des résultats de la caractérisation de l'effluent, des essais de toxicité sublétale et du suivi de la qualité de l'eau visés à l'alinéa 8e) à partir de la date où la mine devient assujettie à l'article 7 du présent règlement;

p) les conclusions des études de suivi biologique et l'incidence de ces conclusions sur le plan d'étude pour les études de suivi biologique subséquentes, compte tenu des éléments suivants :

(i) les résultats de toute étude visée à l'alinéa 10f),

(i) the results of any studies referred to in paragraph 10(f),

(ii) the presence of anthropogenic, natural or other factors that are not related to the effluent under study and that may reasonably be expected to contribute to any observed effect,

(iii) the results of the statistical analysis conducted under paragraphs (h) and (i), and

(iv) the data referred to in paragraph (l);

(q) the month in which the next biological monitoring studies will start, if any biological monitoring studies are required; and

(r) the date when the next interpretative report is required to be submitted or would be required to be submitted but for the application of subsection 16(3).

(2) For the purpose of the study respecting fish population, the magnitude of the effect for an effect indicator is to be calculated using the following formula:

(A – B)/B × 100

where

A is

(a) for the purpose of the age indicator, the mean value for the indicator in the exposure area, and

(b) for the purpose of the indicators other than age, the adjusted mean value — obtained using the analysis of covariance (ANCOVA) statistical test method — for the indicator in the exposure area; and

B is

(a) for the purpose of the age indicator, the mean value for the indicator in the reference area, and

(b) for the purpose of the indicators other than age, the adjusted mean value — obtained using the analysis of covariance (ANCOVA) statistical test method — for the indicator in the reference area.

(3) For the purposes of the study respecting the benthic invertebrate community, the magnitude of the effect for an effect indicator is to be calculated using the following formula:

(A – B)/C

where

A is the mean value for the indicator in the exposure area;

B is the mean value for the indicator in the reference area; and

C is the standard deviation for the indicator in the reference area.

(ii) la présence de facteurs anthropiques, naturels ou autres non liés à l'effluent à l'étude et dont on peut raisonnablement s'attendre à ce qu'ils contribuent à tout effet observé,

(iii) les résultats de l'analyse statistique effectuée en application des alinéas h) et i),

(iv) les données visées à l'alinéa l);

q) le mois pendant lequel les prochaines études de suivi biologique débuteront, si des études de suivi biologique sont exigées;

r) la date à laquelle le prochain rapport d'interprétation doit être présenté ou devrait être présenté si ce n'était l'application du paragraphe 16(3).

(2) Pour l'étude sur la population de poissons, l'ampleur de l'effet d'un indicateur d'effet se calcule selon la formule suivante :

(A – B)/B × 100

où :

A représente :

a) dans le cas de l'âge, la moyenne pour l'indicateur dans la zone exposée;

b) dans le cas des autres indicateurs d'effet, la moyenne ajustée — obtenue en application de la méthode statistique de l'analyse de covariance (ANCOVA) — pour l'indicateur dans la zone exposée;

B selon le cas :

a) dans le cas de l'âge, la moyenne pour l'indicateur dans la zone de référence;

b) dans le cas des autres indicateurs d'effet, la moyenne ajustée — obtenue en application de la méthode statistique de l'analyse de covariance (ANCOVA) — pour l'indicateur dans la zone de référence.

(3) Pour l'étude sur la communauté d'invertébrés benthiques, l'ampleur de l'effet d'un indicateur se calcule selon la formule suivante :

(A – B)/C

où :

A représente la moyenne pour l'indicateur dans la zone exposée;

B la moyenne pour l'indicateur dans la zone de référence;

C l'écart-type pour l'indicateur dans la zone de référence.

DIVISION 2

Subsequent Biological Monitoring Studies

Subsequent Study Designs

13 (1) Each subsequent study design shall be submitted to the Minister of the Environment

(a) at least six months before the start of the biological monitoring studies that are set out in that study design; or

(b) if no biological monitoring studies are required, not later than 12 months after the day on which the previous interpretative report was required to be submitted or would have been required to be submitted but for the application of subsection 16(3).

(2) Each subsequent study design shall include

(a) a summary of the information referred to in paragraph 10(a) and a description of any changes to that information since the submission of the most recent study design, as well as — in respect of each calendar year — any supporting data, including raw data, for the estimate referred to in subparagraph 10(a)(i), whether or not the estimate has changed;

(b) the information referred to in paragraphs 10(b) to (e);

(c) a summary of the results of any biological monitoring studies conducted after June 6, 2002;

(d) if the study referred to in paragraph 9(1)(e) is required,

(i) the month in which the study will start, and

(ii) a description of how the study will be conducted that includes any field and laboratory methodologies that will be used to determine the cause of the effect; and

(e) if the cause of an effect on the fish population, on fish tissue from mercury or on the benthic invertebrate community is known, the cause of the effect and any supporting data, including raw data.

Conduct of Subsequent Biological Monitoring Studies

14 (1) Subject to subsection (2), the subsequent biological monitoring studies shall be conducted in accordance with the study design submitted under section 13.

(2) If the owner or operator is unable to follow the study design due to circumstances beyond their control, the owner or

SECTION 2

Études de suivi biologique subséquentes

Plans d'étude subséquents

13 (1) Tout plan d'étude de suivi biologique subséquent est présenté au ministre de l'Environnement :

a) au moins six mois avant le début des études de suivi biologique visées dans ce plan d'étude;

b) si aucune étude de suivi biologique n'est exigée, au plus douze mois après la date à laquelle le rapport d'interprétation précédent devait être présenté ou aurait dû être présenté si ce n'était l'application du paragraphe 16(3).

(2) Tout plan d'étude de suivi biologique subséquent comporte :

a) un résumé des renseignements visés à l'alinéa 10a) et une description de toute modification à ces renseignements apportée depuis la présentation du dernier plan d'étude ainsi que, à l'égard de toute année civile, toute donnée justificative à l'appui de l'estimation visée au sous-alinéa 10a)(i), y compris les données brutes, que cette estimation ait changé ou non;

b) les renseignements visés aux alinéas 10b) à e);

c) un résumé des résultats de toute étude de suivi biologique effectuée depuis le 6 juin 2002;

d) si une étude visée à l'alinéa 9(1)e) est requise :

(i) le mois pendant lequel l'étude débutera,

(ii) une description de la façon dont l'étude sera effectuée, y compris toute méthode sur le terrain et en laboratoire, pour établir la cause de l'effet;

e) si la cause d'un effet sur la population de poissons, d'un effet du mercure sur les tissus de poissons ou d'un effet sur la communauté d'invertébrés benthiques est connue, la cause de l'effet ainsi que toute donnée justificative à l'appui, y compris les données brutes.

Déroulement des études de suivi biologique subséquentes

14 (1) Toute étude de suivi biologique subséquente est effectuée conformément au plan d'étude présenté en application de l'article 13.

(2) Toutefois, si le propriétaire ou l'exploitant est incapable de suivre le plan d'étude pour des raisons indépendantes de

operator shall inform the Minister of the Environment without delay of those circumstances and the changes that are made to the study.

Content of Subsequent Interpretative Reports

15 Subject to subsection 16(3), each subsequent study design shall be followed by a subsequent interpretative report that includes

(a) for a study referred to in paragraphs 9(1)(a) to (d), the information referred to in paragraphs 12(1)(a) to (n) and (p) to (r);

(b) a summary of the results of effluent characterization, sublethal toxicity testing and water quality monitoring reported under paragraph 8(e) after the day on which the previous interpretative report was required to be submitted or would have been required to be submitted but for the application of subsection 16(3); and

(c) if the study design includes the description required under paragraph 13(2)(d),

(i) the cause of the effect, if determined, and any supporting data, including raw data, or

(ii) if the cause of the effect was not determined, an explanation of why and a description of any steps that need to be taken in the next study to determine that cause.

Submission of Subsequent Interpretative Reports

16 (1) Subject to subsection (2), each subsequent interpretative report shall be submitted to the Minister of the Environment not later than 36 months after the day on which the previous interpretative report was required to be submitted or would have been required to be submitted but for the application of subsection 16(3).

(2) The interpretative report following a resumption of effluent discharge referred to in subsection 17(2) shall be submitted not later than 36 months after the day on which effluent discharge resumes.

(3) An interpretative report is not required in respect of a 36-month period if no biological monitoring studies are required in respect of that period.

Cessation of Discharge

17 (1) The owner or operator of a mine that has ceased discharging effluent for a period of at least 36 months is not required to conduct environmental effects monitoring studies so long as the period of cessation continues.

sa volonté, il en avise sans délai le ministre de l'Environnement et l'informe des modifications à apporter aux modalités du déroulement de l'étude.

Contenu des rapports d'interprétation subséquents

15 Sous réserve du paragraphe 16(3), tout plan d'étude subséquent est suivi d'un rapport d'interprétation subséquent qui comporte :

a) dans le cas des études visées aux alinéas 9(1)a) à d), les renseignements visés aux alinéas 12(1)a) à n) et p) à r);

b) un résumé des résultats de la caractérisation de l'effluent, des essais de toxicité sublétale et du suivi de la qualité de l'eau visés à l'alinéa 8e) à partir de la date à laquelle le rapport d'interprétation précédent devait être présenté ou aurait dû être présenté si ce n'était l'application du paragraphe 16(3);

c) si le plan d'étude comprend une description exigée par l'alinéa 13(2)d) :

(i) la cause de l'effet, si elle a été déterminée, ainsi que toutes données justificatives à l'appui, y compris les données brutes,

(ii) si la cause n'a pas été déterminée, les raisons de l'échec ainsi que les mesures nécessaires pour déterminer cette cause lors de la prochaine étude.

Présentation des rapports d'interprétation subséquents

16 (1) Tout rapport d'interprétation subséquent est présenté au ministre de l'Environnement au plus tard trente-six mois après la date à laquelle le rapport d'interprétation précédent devait être présenté ou aurait dû être présenté si ce n'était l'application du paragraphe 16(3).

(2) Toutefois, le rapport d'interprétation suivant la reprise du rejet d'effluents visée au paragraphe 17(2) est présenté au plus tard trente-six mois après la date de cette reprise.

(3) Aucun rapport d'interprétation n'est exigé à l'égard d'une période de trente-six mois à l'égard de laquelle aucune étude de suivi biologique n'est exigée.

Cessation du rejet d'effluent

17 (1) Le propriétaire ou l'exploitant d'une mine dont les rejets d'effluent ont cessé pour une période d'au moins trente-six mois n'a pas l'obligation de mener des études de suivi des effets sur l'environnement tant que l'absence de rejets se poursuit.

(2) The requirement to conduct environmental effects monitoring studies shall resume, as the case may be, on

(a) the day on which effluent discharge resumes; or

(b) the day on which a notice referred to in paragraph 32(1)(a) of these Regulations is received by the Minister of the Environment.

(3) The owner or operator shall notify the Minister of the Environment in writing without delay

(a) when the period of cessation begins; and

(b) when the mine resumes effluent discharge.

(4) Any biological monitoring study that began before the end of the 36-month period shall be completed and followed by an interpretative report in accordance with section 15.

(2) L'obligation de mener des études de suivi des effets sur l'environnement reprend, selon le cas :

a) à la date de reprise du rejet d'effluents;

b) à la date à laquelle l'avis visé à l'alinéa 32(1)a) du présent règlement est reçu par le ministre de l'Environnement.

(3) Le propriétaire ou l'exploitant d'une mine avise le ministre de l'Environnement par écrit sans délai :

a) au début de la période d'absence de rejet d'effluents;

b) à la reprise du rejet d'effluents.

(4) Toute étude de suivi biologique débutée avant la fin de la période de trente-six mois est complétée et suivie d'un rapport d'interprétation conformément à l'article 15.

DIVISION 3

Final Studies

General

18 (1) If an owner or operator of a mine has provided a notice referred to in paragraph 32(1)(a) of these Regulations to the Minister of the Environment, the owner or operator shall

(a) if the notice is received before biological monitoring studies have started, conduct the biological monitoring studies and submit any interpretative report that is required in respect of those studies; and

(b) if the notice is received after biological monitoring studies have started, in addition to submitting any interpretative report that is required in respect of those studies, submit a final study design in accordance with subsection (2), conduct final biological monitoring studies in accordance with section 19 and submit a final interpretative report in accordance with section 20.

(2) The final study design shall be submitted to the Minister of the Environment not later than six months after the day on which the notice referred to in paragraph 32(1)(a) of these Regulations is received. It shall include the information required under subsection 13(2).

Conduct of Final Biological Monitoring Studies

19 (1) Subject to subsection (2), the final biological monitoring studies shall be conducted in accordance with the study design submitted under subsection 18(2) not earlier than six months after the day on which the final study design has been submitted.

SECTION 3

Études finales

Généralités

18 (1) S'il a présenté au ministre de l'Environnement un avis visé à l'alinéa 32(1)a) du présent règlement, le propriétaire ou l'exploitant d'une mine :

a) dans le cas où l'avis est reçu avant le début des études de suivi biologique, effectue les études de suivi biologique et présente tout rapport d'interprétation requis à l'égard de ces études;

b) dans le cas où l'avis est reçu après le début des études de suivi biologique, en plus d'effectuer les études de suivi biologique et de présenter tout rapport d'interprétation exigé à l'égard de ces études, présente un plan d'étude final conformément au paragraphe (2), effectue une étude de suivi biologique finale conformément à l'article 19 et présente un rapport d'interprétation final conformément à l'article 20.

(2) Le plan d'étude final est présenté au ministre de l'Environnement au plus tard six mois après la date de réception de l'avis visé à l'alinéa 32(1)a) du présent règlement et comporte les renseignements exigés par le paragraphe 13(2).

Déroulement des études de suivi biologique finales

19 (1) Les études de suivi biologique finales sont effectuées conformément au plan d'étude présenté en application du paragraphe 18(2), au plus tôt six mois après la date de présentation du plan d'étude final.

(2) If the owner or operator is unable to follow the study design due to circumstances beyond their control, the owner or operator shall inform the Minister of the Environment without delay of those circumstances and the changes that are made to the study.

Content of Final Interpretative Report

20 The final interpretative report shall be submitted to the Minister of the Environment not later than three years after the day on which the notice referred to in paragraph 32(1)(a) of these Regulations is received and shall include the information referred to in paragraphs 15(a) to (c).

SOR/2006-239, ss. 26 to 33, 34(F); SOR/2012-22, ss. 10 to 17; SOR/2018-99, s. 33.

(2) Toutefois, si le propriétaire ou l'exploitant est incapable de suivre le plan d'étude pour des raisons indépendantes de sa volonté, il en avise sans délai le ministre de l'Environnement et l'informe des modifications à apporter aux modalités du déroulement de l'étude.

Contenu du rapport d'interprétation final

20 Le rapport d'interprétation final est présenté au ministre de l'Environnement au plus tard trois ans après la date de réception de l'avis visé à l'alinéa 32(1)a) du présent règlement et comporte les renseignements visés aux alinéas 15a) à c).

DORS/2006-239, art. 26 à 33 et 34(F); DORS/2012-22, art. 10 à 17; DORS/2018-99, art. 33.

SCHEDULE 6

(Section 22)

Annual Report Summarizing Effluent Monitoring Results

PART 1

Identifying Information

1 Name of the mine

2 Address of the mine

3 Name of the operator of the mine

4 Operator's telephone number and e-mail address, if any

5 Reporting period

6 Date of report

PART 2

Test Results Respecting Each Final Discharge Point

1 Complete the following table with the monthly mean concentration for the deleterious substances set out in the table for each final discharge point and identify the location of the final discharge point.

2 Any measurement not taken because there was no deposit from the final discharge point shall be identified by the letters "NDEP" (No Deposit).

3 Any measurement not taken because no measurement was required in accordance with the conditions set out in section 12 or 13 of the *Metal Mining Effluent Regulations* shall be identified by the letters "NMR" (No Measurement Required).

ANNEXE 6

(article 22)

Rapport annuel résumant les résultats du suivi de l'effluent

PARTIE 1

Renseignements identificatoires

1 Nom de la mine

2 Adresse de la mine

3 Nom de l'exploitant de la mine

4 Numéro de téléphone de l'exploitant et adresse électronique, le cas échéant

5 Période visée

6 Date du rapport

PARTIE 2

Résultats des essais à chacun des points de rejet final

1 Remplir le tableau suivant pour chaque point de rejet final, identifier son emplacement et indiquer la moyenne mensuelle de la concentration des substances nocives.

2 S'il n'y a pas eu de résultats parce qu'il n'y avait pas de rejet à partir du point de rejet final, inscrire « A.R. » (aucun rejet).

3 S'il n'y a pas eu de mesure parce que l'article 12 ou 13 du *Règlement sur le effluents des mines de métaux* n'en exigeait aucune, inscrire « A.M.E. » (aucune mesure exigée).

Location of final discharge point:											
Month	As (mg/L)	Cu (mg/L)	CN (mg/L)	Pb (mg/L)	Ni (mg/L)	Zn (mg/L)	TSS (mg/L)	Ra 226 (Bq/L)	Lowest pH	Highest pH	Effluent Volume (m^3)
Jan											
Feb											
Mar											
Apr											
May											
June											
July											
Aug											
Sept											
Oct											
Nov											
Dec											

Emplacement du point de rejet final :											
Mois	As (mg/L)	Cu (mg/L)	CN (mg/L)	Pb (mg/L)	Ni (mg/L)	Zn (mg/L)	TSS (mg/L)	Ra 226 (Bq/L)	pH le plus bas	pH le plus haut	Volume d'effluent (m^3)
Janv											
Févr.											
Mars											
Avr											
Mai											
Juin											
Juill.											
Août											
Sept											
Oct											
Nov											
Déc											

PART 3

Results of Acute Lethality Tests and *Daphnia Magna* Monitoring Tests

Location of final discharge point:			
Date Sample Collected	Results for Rainbow Trout Acute Lethality Tests (mean percentage mortality in 100% effluent test concentration)	Results for *Daphnia magna* Monitoring Tests (mean percentage mortality in 100% effluent test concentration)	Results for Threespine Stickleback Acute Lethality Tests (mean percentage mortality in 100% effluent test concentration)

PARTIE 3

Résultats des essais de détermination de la létalité aiguë et des essais de suivi avec bioessais sur la *Daphnia magna*

Emplacement du point de rejet final :			
Date du prélèvement de l'échantillon	Résultats des essais de détermination de la létalité aiguë sur la truite arc-en-ciel (pourcentage moyen de mortalité dans l'effluent non dilué)	Résultats des essais de suivi avec bioessais sur la *Daphnia magna* (pourcentage moyen de mortalité dans l'effluent non dilué)	Résultats des essais de détermination de la létalité aiguë sur l'épinoche à trois épines (pourcentage moyen de mortalité dans l'effluent non dilué)

PART 4

[Repealed, SOR/2018-99, s. 34]

SOR/2006-239, s. 35; SOR/2018-99, s. 34.

PARTIE 4

[Abrogée, DORS/2018-99, art. 34]

DORS/2006-239, art. 35; DORS/2018-99, art. 34.

SCHEDULE 6.1

[Repealed, SOR/2018-99, s. 35]

ANNEXE 6.1

[Abrogée, DORS/2018-99, art. 35]

SCHEDULE 7
[Repealed, SOR/2018-99, s. 35]

ANNEXE 7
[Abrogée, DORS/2018-99, art. 35]

SCHEDULE 8
[Repealed, SOR/2018-99, s. 35]

ANNEXE 8
[Abrogée, DORS/2018-99, art. 35]

RELATED PROVISIONS

— SOR/2018-99, s. 37

37 (1) Despite subsection 8(1) of the *Metal and Diamond Mining Effluent Regulations*, the owner or operator of a mine that is subject to those Regulations on the day on which this section comes into force shall submit in writing to the Minister of the Environment the information referred to in paragraph 8(2)(c) of those Regulations not later than 60 days after the day on which this section comes into force.

(2) During the 12-month period beginning on the day on which this section comes into force, despite subsection 16(2) of the *Metal and Diamond Mining Effluent Regulations*, the owner or operator of a diamond mine may, for the purposes of determining whether effluent is acutely lethal for the 12-month period referred to in subsection 16(1) of those Regulations, use acute lethality data that was collected during any period of 12 consecutive months before the day on which this section comes into force, if the owner or operator submits a report to the Minister of the Environment that indicates that

(a) the tests to determine acute lethality have been conducted in accordance with the procedures set out in section 5 or 6 of Reference Method EPS 1/RM/10 or section 5 or 6 of Reference Method EPS 1/RM/13;

(b) the data relates to effluent generated after the start of commercial operation by the mine; and

(c) the data was collected not more than 36 months before the day on which this section comes into force.

(3) During the 12-month period beginning on the day on which section 14.3 of the *Metal and Diamond Mining Effluent Regulations* comes into force, despite subsection 16(2) of those Regulations, the owner or operator of a metal mine or diamond mine may, for the purposes of determining whether effluent is acutely lethal for the 12-month period referred to in subsection 16(1) of those Regulations, use acute lethality data that was collected during any period of 12 consecutive months before the day on which that section 14.3 comes into force, if the owner or operator submits a report to the Minister of the Environment that indicates that

(a) the tests to determine acute lethality have been conducted in accordance with the procedures set out in section 5 or 6 of Reference Method EPS 1/RM/14;

(b) the data relates to effluent generated after the start of commercial operation by the mine; and

(c) the data was collected not more than 36 months before the day on which that section 14.3 comes into force.

DISPOSITIONS CONNEXES

— DORS/2018-99, art. 37

37 (1) Malgré le paragraphe 8(1) du *Règlement sur les effluents des mines de métaux et des mines de diamants*, le propriétaire ou l'exploitant d'une mine qui est assujettie à ce règlement, à la date d'entrée en vigueur du présent article, présente par écrit au ministre de l'Environnement les renseignements visés à l'alinéa 8(2)c) de ce règlement dans les soixante jours suivant la date d'entrée en vigueur du présent article.

(2) Pendant la période de douze mois commençant à la date d'entrée en vigueur du présent article, malgré le paragraphe 16(2) de ce règlement, le propriétaire ou l'exploitant d'une mine de diamants peut se fonder sur les données d'essai de détermination de la létalité aiguë recueillies pendant toute période de douze mois consécutifs précédant la date d'entrée en vigueur du présent article pour établir si l'effluent présente une létalité aiguë pendant la période de douze mois visée au paragraphe 16(1) de ce règlement, s'il présente au ministre de l'Environnement un rapport indiquant que :

a) les essais de détermination de la létalité aiguë ont été effectués conformément aux modes opératoires prévus aux sections 5 ou 6 de la méthode de référence SPE 1/RM/10 ou aux sections 5 ou 6 de la méthode de référence SPE 1/RM/13;

b) les données se rapportent à l'effluent émanant de la mine depuis le début de son exploitation commerciale;

c) les données ont été recueillies au cours des trente-six mois précédant la date d'entrée en vigueur du présent article.

(3) Pendant la période de douze mois commençant à la date d'entrée en vigueur de l'article 14.3 de ce règlement, malgré le paragraphe 16(2) de ce règlement, le propriétaire ou l'exploitant d'une mine de métal ou d'une mine de diamants peut se fonder sur les données d'essai de détermination de la létalité aiguë recueillies pendant toute période de douze mois consécutifs précédant la date d'entrée en vigueur de l'article 14.3 de ce règlement pour établir si l'effluent présente une létalité aiguë pendant la période de douze mois visée au paragraphe 16(1) de ce règlement, s'il présente au ministre de l'Environnement un rapport indiquant que :

a) les essais de détermination de la létalité aiguë ont été effectués conformément aux modes opératoires prévus aux sections 5 ou 6 de la méthode de référence SPE 1/RM/14;

b) les données se rapportent à l'effluent émanant de la mine depuis le début de son exploitation commerciale;

c) les données ont été recueillies au cours des trente-six mois précédant l'entrée en vigueur de l'article 14.3 de ce règlement.

— SOR/2018-99, s. 38

38 (1) Despite section 10 of Schedule 5 to the *Metal and Diamond Mining Effluent Regulations*, the first study design of a diamond mine that is subject to those Regulations on June 1, 2018 may be submitted not later than the earlier of June 1, 2021 and the day on which a document that is equivalent to a study design is required to be submitted under provincial or territorial laws.

(2) In the case of a diamond mine in respect of which the first study design is submitted under subsection (1), the period referred to in subsection 11(1) of Schedule 5 to the *Metal and Diamond Mining Effluent Regulations* does not apply.

(3) In the case of a diamond mine that is subject to the *Metal and Diamond Mining Effluent Regulations* on June 1, 2018, the results of any studies conducted before the day on which the first study design is submitted may be used for the purpose of determining which biological monitoring studies are required to be conducted under section 9 of Schedule 5 to those Regulations if those results can be used for the purpose of meeting the requirements of section 12 of that Schedule.

(4) However, only information gathered — for the purpose of meeting the requirements of provincial or territorial laws — during the three-year period before the day on which the first study design is submitted may be used to determine the concentration of effluent, mercury and selenium for the application of subsections 9(1) and (2) of Schedule 5 to the *Metal and Diamond Mining Effluent Regulations*. If that information is used, paragraph 9(3)(a) of that Schedule does not apply.

(5) If the results of studies referred to in subsection (3) and the information referred to in subsection (4) are used in accordance with those subsections, the first study design shall include, in addition to the information referred to in section 10 of Schedule 5 to the *Metal and Diamond Mining Effluent Regulations*, the information referred to in paragraph 13(2)(d) or (e), as the case may be, of that Schedule, copies of and a summary of the results of the studies and an explanation — that includes supporting information — as to how the results and information can be used for the purposes of meeting the requirements of sections 9 and 12 of that Schedule.

(6) In the case of a diamond mine that is subject to the *Metal and Diamond Mining Effluent Regulations* on June 1, 2018, the effluent and water quality monitoring studies set out in Part 1 of Schedule 5 to those Regulations shall be started on the day on which the first study design is submitted.

(7) In the case of a diamond mine that is subject to the *Metal and Diamond Mining Effluent Regulations* on June 1, 2018, the results of sublethal toxicity tests conducted — for the purpose of meeting the requirements of provincial or territorial laws — during the three-year period before the day on which the first study design is submitted may be used for the application of subsection 6(3) of Schedule 5 to those Regulations, as if three years had elapsed, if those tests meet the requirements of subsection 5(1) of that Schedule. If those results are used, subsections 6(1) and (2) of that Schedule do not apply.

— DORS/2018-99, art. 38

38 (1) Malgré l'article 10 de l'annexe 5 du *Règlement sur les effluents des mines de métaux et des mines de diamants*, le premier plan d'étude concernant une mine de diamants assujettie à ce règlement le 1er juin 2018 peut être présenté, au plus tard, le 1er juin 2021 ou, si elle est antérieure, à la date à laquelle un document équivalent à un plan d'étude doit être présenté aux termes de règles de droit provinciales ou territoriales.

(2) Dans le cas d'une mine de diamants à l'égard de laquelle le premier plan d'étude est présenté en application du paragraphe (1), la période visée au paragraphe 11(1) de cette annexe ne s'applique pas.

(3) Dans le cas d'une mine de diamants assujettie à ce règlement le 1er juin 2018, les résultats d'études effectuées avant la date à laquelle le premier plan d'étude est présenté peuvent être utilisés pour déterminer quelles études de suivi biologique doivent être effectuées en application de l'article 9 de cette annexe, à condition que ces résultats puissent être utilisés pour satisfaire aux exigences prévues à l'article 12 de cette annexe.

(4) Toutefois, seuls les renseignements recueillis — pour satisfaire aux règles de droit provinciales ou territoriales — dans les trois ans qui précèdent la date de présentation du premier plan d'étude peuvent être utilisés pour déterminer la concentration de l'effluent, de mercure et de sélénium pour l'application des paragraphes 9(1) et (2) de cette annexe. Si ces renseignements sont utilisés, l'alinéa 9(3)a) de cette annexe ne s'applique pas.

(5) Si les résultats d'études visés au paragraphe (3) et les renseignements visés au paragraphe (4) sont utilisés conformément à ces paragraphes, le premier plan d'étude comprend, en plus des renseignements visés à l'article 10 de cette annexe, les renseignements visés, selon le cas, à l'alinéa 13(2)d) ou e) de cette annexe, des copies et un résumé des résultats des études et une explication — y compris les renseignements à l'appui — quant à la manière dont les résultats et les renseignements peuvent être utilisées pour satisfaire aux exigences des articles 9 et 12 de cette annexe.

(6) Dans le cas d'une mine de diamants assujettie à ce règlement le 1er juin 2018, les études de suivi de l'effluent et de la qualité de l'eau prévues à la partie 1 de cette annexe débutent à la date de présentation du premier plan d'étude.

(7) Dans le cas d'une mine de diamants assujettie à ce règlement le 1er juin 2018, les résultats d'essais de toxicité sublétale effectués — pour satisfaire aux règles de droit provinciales ou territoriales — dans les trois ans qui précèdent la date de présentation du premier plan d'étude peuvent être utilisés pour l'application du paragraphe 6(3) de cette annexe, comme s'il s'était écoulé trois ans, si ces essais satisfont aux exigences du paragraphe 5(1) de cette annexe. Si ces résultats sont utilisés, les paragraphes 6(1) et (2) de cette annexe ne s'appliquent pas.

(8) If the results of sublethal toxicity tests are used in accordance with subsection (7), the information referred to in paragraphs 8(a), (c), (e) and (g) of Schedule 5 to the *Metal and Diamond Mining Effluent Regulations*, in relation to those tests, shall be submitted to the Minister of the Environment not later than the day on which the first study design is submitted and shall be accompanied by a summary of the results of the tests and an explanation — that includes supporting information — as to how the results can be used for the purposes of meeting the requirements of subsection 5(1) of that Schedule.

(9) In the case of a diamond mine that is subject to the *Metal and Diamond Mining Effluent Regulations* on June 1, 2018, the first interpretative report shall, despite subsection 12(1) of Schedule 5 to those Regulations, be submitted not later than 24 months after the day on which the first study design is submitted and shall contain, in addition to the information referred to in section 12 of that Schedule, the information referred to in paragraph 15(c) of that Schedule.

— SOR/2018-99, s. 39

39 In the case of a metal mine that is subject to the *Metal and Diamond Mining Effluent Regulations* on June 1, 2018,

(a) sections 4 to 8 of Schedule 5 to those Regulations apply beginning on January 1, 2019 and, until that day, the *Metal Mining Effluent Regulations*, as they read immediately before June 1, 2018, continue to apply to the matters referred to in those sections;

(b) subsections 6(1) and (2) of Schedule 5 to those Regulations do not apply and the results of sublethal toxicity tests conducted under the *Metal Mining Effluent Regulations* during the three-year period before January 1, 2019 shall be used for the application of subsection 6(3) of that Schedule, as if three years had elapsed; and

(c) biological monitoring studies started on or before June 1, 2018 shall be completed, and the corresponding interpretative report shall be submitted, in accordance with the *Metal Mining Effluent Regulations*, as they read immediately before June 1, 2018.

(8) Si les résultats d'essais de toxicité sublétale sont utilisés conformément au paragraphe (7), les renseignements relatifs à ces essais visés aux alinéas 8a), c), e) et g) de cette annexe sont présentés au ministre de l'Environnement au plus tard à la date de présentation du premier plan d'étude et ils sont accompagnés d'un résumé des résultats des essais ainsi qu'une explication — y compris les renseignements à l'appui — quant à la manière dont les résultats peuvent être utilisées pour satisfaire aux exigences du paragraphe 5(1) de cette annexe.

(9) Dans le cas d'une mine de diamants assujettie à ce règlement le 1er juin 2018, le premier rapport d'interprétation est présenté, malgré le paragraphe 12(1) de cette annexe, au plus tard vingt-quatre mois après la date de présentation du premier plan d'étude et il comprend, en plus des renseignements visés à l'article 12 de cette annexe, les renseignements visés à l'alinéa 15c) de l'annexe.

— DORS/2018-99, art. 39

39 Dans le cas d'une mine de métaux assujettie au *Règlement sur les effluents des mines de métaux et des mines de diamants* le 1er juin 2018 :

a) les articles 4 à 8 de l'annexe 5 de ce règlement s'appliquent à partir du 1er janvier 2019 et, jusqu'à cette date, les dispositions du *Règlement sur les effluents des mines de métaux*, dans leur version antérieure au 1er juin 2018, continuent de régir les matières visées par ces articles;

b) les paragraphes 6(1) et (2) de cette annexe ne s'appliquent pas et les résultats des essais de toxicité sublétale effectués au titre du *Règlement sur les effluents des mines de métaux* dans les trois années qui précèdent le 1er janvier 2019 sont utilisés pour l'application du paragraphe 6(3) de cette annexe, comme s'il s'était écoulé trois ans;

c) les études de suivi biologique débutées le 1er juin 2018 ou avant cette date sont menées à terme conformément aux dispositions du *Règlement sur les effluents des mines de métaux*, dans leur version antérieure au 1er juin 2018, et le rapport d'interprétation qui s'y rapporte est présenté selon les modalités prévues à cette version du même règlement.

AMENDMENTS NOT IN FORCE

— SOR/2018-99, s. 2(4)

2 (4) The definition *acutely lethal* in subsection 1(1) of the Regulations is amended by striking out "or" at the end of paragraph (a), by adding "or" at the end of paragraph (b) and by adding the following after paragraph (b):

(c) more than 50% of the *Daphnia magna* subjected to it for a period of 48 hours, when tested in accordance with the acute lethality test set out in section 14.3.

— SOR/2018-99, s. 2(6)

2 (6) Section 1 of the Regulations is amended by adding the following after subsection (1):

(2) Every reference in these Regulations to column 1, 2, 3 or 4 of Schedule 4 shall be read as

(a) a reference to column 1, 2, 3 or 4 of Table 1 of Schedule 4, in the case of a mine to which subparagraph 4(1)(a)(i) applies; or

(b) a reference to column 1, 2, 3 or 4 of Table 2 of Schedule 4, in the case of a mine to which subparagraph 4(1)(a)(ii) applies.

— SOR/2018-99, ss. 3(2), (3)

3 (2) Section 3 of the Regulations is amended by striking out "and" at the end of paragraph (g), by adding "and" at the end of paragraph (h) and by adding the following after paragraph (h):

(i) un-ionized ammonia.

(3) Paragraph 4(1)(a) of the Regulations is replaced by the following:

(a) the concentration of the deleterious substance in the effluent does not exceed the maximum authorized concentrations that are set out in columns 2, 3 and 4 of

(i) Table 1 of Schedule 4, in the case of a mine in respect of which these Regulations apply for the first time on or after June 1, 2021 or in the case of a recognized closed mine that returns to commercial operation on or after June 1, 2021, or

(ii) Table 2 of Schedule 4, in any other case;

— SOR/2018-99, s. 4

4 The Regulations are amended by adding the following after section 4:

MODIFICATIONS NON EN VIGUEUR

— DORS/2018-99, par. 2(4)

2 (4) La définition de *létalité aiguë*, au paragraphe 1(1) du même règlement, est modifiée par adjonction, après l'alinéa b), de ce qui suit :

c) plus de 50 % des *Daphnia magna* qui y sont exposées pendant une période de quarante-huit heures au cours de l'essai de détermination de la létalité aiguë visé à l'article 14.3.

— DORS/2018-99, par. 2(6)

2 (6) L'article 1 du même règlement est modifié par adjonction, après le paragraphe (1), de ce qui suit :

(2) Tout renvoi à la colonne 1, 2, 3 ou 4 de l'annexe 4 dans le présent règlement constitue un renvoi :

a) dans le cas d'une mine à laquelle s'applique le sous-alinéa 4(1)a)(i), à la colonne 1, 2, 3 ou 4 du tableau 1 de l'annexe 4;

b) dans le cas d'une mine à laquelle s'applique le sous-alinéa 4(1)a)(ii), à la colonne 1, 2, 3 ou 4 du tableau 2 de l'annexe 4.

— DORS/2018-99, par. 3(2) et (3)

3 (2) L'article 3 du même règlement est modifié par adjonction, après l'alinéa h), de ce qui suit :

i) l'ammoniac non ionisé.

(3) L'alinéa 4(1)a) du même règlement est remplacé par ce qui suit :

a) la concentration de la substance nocive dans l'effluent ne dépasse pas les concentrations maximales permises qui sont établies aux colonnes 2, 3 et 4 :

(i) du tableau 1 de l'annexe 4, dans le cas d'une mine à l'égard de laquelle le présent règlement s'applique pour la première fois le 1er juin 2021 ou après cette date ou d'une une mine reconnue fermée dont l'exploitation commerciale a repris le 1er juin 2021 ou après cette date,

(ii) du tableau 2 de l'annexe 4, dans tous les autres cas;

— DORS/2018-99, art. 4

4 Le même règlement est modifié par adjonction, après l'article 4, de ce qui suit :

4.1 Paragraph 4(1)(c) does not apply in the case where the effluent is determined to be acutely lethal in accordance with the procedures set out in section 5 or 6 of Reference Method EPS 1/RM/14 when the owner or operator of a mine is testing at the frequency prescribed in subsection 14(1), unless the effluent is determined to be acutely lethal in accordance with any other acute lethality test.

— SOR/2018-99, ss. 9(2) to (4)

9 (2) Subsection 12(1) of the Regulations is replaced by the following:

12 (1) The owner or operator of a mine shall, not less than once per week and at least 24 hours apart, collect from each final discharge point

(a) a grab sample or composite sample of effluent and record the pH of the sample at the time of its collection and record, without delay after collecting the sample, the concentrations of the deleterious substances prescribed in section 3 except un-ionized ammonia; and

(b) a grab sample of effluent and record the temperature and the pH of the sample at the time of its collection and record, without delay after collecting the sample, the concentrations of total ammonia expressed as nitrogen (N).

(3) Section 12 of the Regulations is amended by adding the following after subsection (3):

(4) The owner or operator of a mine shall determine and record the concentration of un-ionized ammonia, using the temperature, pH and concentration of total ammonia recorded under paragraph (1)(b), in accordance with the following formula:

$$A\ (1/(1 + 10^{pKa-pH}))$$

where

A is the concentration of total ammonia — which is the sum of un-ionized ammonia (NH_3) and ionized ammonia (NH_4^+) — expressed in mg/L as nitrogen (N);

pH is the pH of the effluent sample; and

pKa is a dissociation constant calculated in accordance with the following formula:

$$0.09018 + 2729.92/T$$

where

T is the temperature of the effluent sample in kelvin.

(4) Subsection 13(1) of the Regulations is replaced by the following:

13 (1) The owner or operator of a mine may reduce the frequency of conducting tests relating to the concentrations of arsenic, copper, cyanide, lead, nickel, zinc or un-ionized ammonia at a final discharge point to not less than once in each calendar quarter, each test being conducted at least one

4.1 L'alinéa 4(1)c) ne s'applique pas s'il est déterminé que l'effluent présente une létalité aiguë conformément aux modes opératoires visés aux sections 5 ou 6 de la méthode de référence SPE 1/RM/14, lorsque le propriétaire ou l'exploitant d'une mine effectue l'essai à la fréquence prévue au paragraphe 14(1) à moins qu'un autre essai de détermination de la létalité aiguë indique que l'effluent présente une létalité aiguë.

— DORS/2018-99, par. 9(2) à (4)

9 (2) Le paragraphe 12(1) du même règlement est remplacé par ce qui suit :

12 (1) Au moins une fois par semaine et à au moins vingt-quatre heures d'intervalle, le propriétaire ou l'exploitant d'une mine prélève, à partir de chaque point de rejet final :

a) un échantillon instantané ou un échantillon composite d'effluent dont il enregistre le pH au moment du prélèvement, ainsi que, sans délai après celui-ci, les concentrations des substances nocives désignées à l'article 3, à l'exception de l'ammoniac non ionisé;

b) un échantillon instantané d'effluent dont il enregistre la température et le pH au moment du prélèvement, ainsi que, sans délai après celui-ci, la concentration d'ammoniac total sous forme d'azote (N).

(3) L'article 12 du même règlement est modifié par adjonction, après le paragraphe (3), de ce qui suit :

(4) Le propriétaire ou l'exploitant d'une mine calcule et enregistre la concentration d'ammoniac non ionisé selon la formule ci-après, en utilisant la température, le pH et la concentration d'ammoniac total enregistré en application de l'alinéa (1)b) :

$$A\ (1/(1 + 10^{pKa-pH}))$$

où :

A représente la concentration d'ammoniac total — soit l'ammoniac non ionisé (NH_3) et l'ammoniac ionisé (NH_4^+) — exprimée en mg/L et sous forme d'azote (N);

pH le pH de l'échantillon d'effluent;

pKa la constante de dissociation calculée selon la formule suivante :

$$0,09018 + 2729,92/T$$

où :

T représente la température de l'échantillon d'effluent en kelvin.

(4) Le paragraphe 13(1) du même règlement est remplacé par ce qui suit :

13 (1) Le propriétaire ou l'exploitant d'une mine peut, à un point de rejet final, réduire la fréquence des essais concernant la concentration d'arsenic, de cuivre, de cyanure, de plomb, de nickel, de zinc ou d'ammoniac non ionisé à au moins une fois par trimestre civil, chaque essai étant effectué à au moins

month apart, if that substance's monthly mean concentration at that final discharge point is less than 10% of the value set out in column 2 of Schedule 4 for 12 consecutive months.

— SOR/2018-99, ss. 10(2), (3)

10 (2) Subsection 14(1) of the Regulations is replaced by the following:

14 (1) Subject to section 15, the owner or operator of a mine shall collect, once a month, a grab sample of effluent from each final discharge point and determine whether the effluent is acutely lethal by conducting acute lethality tests on aliquots of each effluent sample in accordance with sections 14.1 to 14.3.

(3) Subsection 14(3) of the Regulations is replaced by the following:

(3) When collecting a grab sample of effluent for the purposes of subsection (1), the owner or operator of a mine shall

(a) collect a sufficient volume of effluent to enable the owner or operator to comply with paragraph 15(1)(a); and

(b) record the temperature and the pH of each grab sample of effluent at the time of the sample's collection.

— SOR/2018-99, s. 11

11 The Regulations are amended by adding the following after section 14.2:

Acute Lethality Test — *Daphnia Magna*

14.3 Unless the salinity value of the effluent is equal to or greater than four parts per thousand and the effluent is deposited into marine waters, the owner or operator of a mine shall, in addition to conducting the acute lethality test set out in section 14.1, determine whether the effluent is acutely lethal by conducting an acute lethality test in accordance with the procedures set out in section 5 or 6 of Reference Method EPS 1/RM/14.

— SOR/2018-99, s. 12(2)

12 (2) Paragraphs 15(1)(a) and (b) of the Regulations are replaced by the following:

(a) without delay,

(i) conduct the effluent characterization set out in subsection 4(1) of Schedule 5 on the aliquot of each grab sample collected under subsection 14(1),

(ii) record the concentration of total ammonia and, using that concentration and using the temperature and pH recorded under paragraph 14(3)(b), determine the

un mois d'intervalle, si la concentration moyenne mensuelle de la substance à ce point de rejet final est inférieure à 10 % de la valeur établie à la colonne 2 de l'annexe 4 pendant douze mois consécutifs.

— DORS/2018-99, par. 10(2) et (3)

10 (2) Le paragraphe 14(1) du même règlement est remplacé par ce qui suit :

14 (1) Sous réserve de l'article 15, le propriétaire ou l'exploitant d'une mine prélève une fois par mois un échantillon instantané d'effluent à chaque point de rejet final et détermine si cet effluent présente une létalité aiguë en effectuant des essais de détermination de la létalité aiguë sur des portions aliquotes de chaque échantillon conformément aux articles 14.1 à 14.3.

(3) Le paragraphe 14(3) du même règlement est remplacé par ce qui suit :

(3) Lors du prélèvement des échantillons instantanés en application du paragraphe (1), le propriétaire ou l'exploitant d'une mine :

a) prélève un volume d'effluent suffisant pour lui permettre de se conformer à l'alinéa 15(1)a);

b) enregistre, au moment du prélèvement, la température et le pH de chaque échantillon.

— DORS/2018-99, art. 11

11 Le même règlement est modifié par adjonction, après l'article 14.2, de ce qui suit :

Essai de détermination de la létalité aiguë — *Daphnia magna*

14.3 Sauf dans le cas où la salinité de l'effluent est égale ou supérieure à quatre parties par millier et que l'effluent est rejeté dans l'eau de mer, le propriétaire ou l'exploitant d'une mine détermine si l'effluent présente une létalité aiguë en effectuant, en plus de l'essai de détermination de la létalité aiguë prévu à l'article 14.1, un essai de détermination de la létalité aiguë conformément aux modes opératoires prévus aux sections 5 ou 6 de la méthode de référence SPE 1/RM/14.

— DORS/2018-99, par. 12(2)

12 (2) Les alinéas 15(1)a) et b) du même règlement sont remplacés par ce qui suit :

a) sans délai :

(i) effectue la caractérisation de l'effluent conformément au paragraphe 4(1) de l'annexe 5 sur une portion aliquote de chaque échantillon instantané prélevé en application du paragraphe 14(1),

(ii) enregistre la concentration d'ammoniac total et, au moyen de cette concentration et de la température et du

concentration of un-ionized ammonia in accordance with the formula set out in subsection 12(4), and

(iii) record the concentrations of the deleterious substances prescribed in section 3;

(b) collect a grab sample twice a month from the final discharge point from which the effluent sample determined to be acutely lethal was collected, record the temperature and the pH of each sample at the time of its collection and, without delay, conduct the acute lethality test that determined the effluent sample to be acutely lethal on each grab sample in accordance with the procedure set out in section 6 of the applicable reference method and, if the sample is determined to be acutely lethal, without delay,

(i) conduct the effluent characterization set out in subsection 4(1) of Schedule 5 on the aliquot of each grab sample,

(ii) record the concentration of total ammonia and, using that concentration and using the temperature and pH recorded under this paragraph, determine the concentration of un-ionized ammonia in accordance with the formula set out in subsection 12(4), and

(iii) record the concentrations of the deleterious substances prescribed in section 3; and

pH enregistrés en application de l'alinéa 14(3)b), calcule la concentration d'ammoniac non ionisé selon la formule prévue au paragraphe 12(4),

(iii) enregistre les concentrations des substances nocives désignées à l'article 3;

b) deux fois par mois, prélève un échantillon instantané à partir du point de rejet final d'où l'échantillon d'effluent qui présente une létalité aiguë a été prélevé, enregistre, au moment du prélèvement, la température et le pH de chaque échantillon, et effectue sans délai après le prélèvement, sur chacun de ces échantillons, selon le mode opératoire prévu à la section 6 de la méthode de référence, l'essai de détermination de la létalité aiguë à partir duquel la létalité aiguë de l'échantillon a été établie. S'il est ainsi établi que l'échantillon présente une létalité aiguë, le propriétaire ou l'exploitant d'une mine, sans délai :

(i) effectue la caractérisation de l'effluent conformément au paragraphe 4(1) de l'annexe 5 sur une portion aliquote de chaque échantillon instantané,

(ii) enregistre la concentration d'ammoniac total et, au moyen de cette concentration et de la température et du pH enregistrés en application du présent alinéa, calcule la concentration d'ammoniac non ionisé selon la formule prévue au paragraphe 12(4),

(iii) enregistre les concentrations des substances nocives désignées à l'article 3;

— SOR/2018-99, s. 13

13 The Regulations are amended by adding the following after section 15:

15.1 Despite paragraph 15(1)(c), if an effluent sample is determined to be acutely lethal when tested using the acute lethality test set out in section 14.3, the owner or operator of a mine shall, without delay, collect the first grab sample required by paragraph 15(1)(b) and comply with the requirements of that paragraph.

— DORS/2018-99, art. 13

13 Le même règlement est modifié par adjonction, après l'article 15, de ce qui suit :

15.1 Malgré l'alinéa 15(1)c), s'il est établi qu'un échantillon d'effluent présente une létalité aiguë après l'essai de détermination de la létalité aiguë prévu à l'article 14.3, le propriétaire ou l'exploitant d'une mine prélève sans délai le premier échantillon instantané exigé par l'alinéa 15(1)b) et se conforme aux exigences de cet alinéa.

— SOR/2018-99, s. 15(2)

15 (2) Section 17 of the Regulations and the heading before it are repealed.

— DORS/2018-99, par. 15(2)

15 (2) L'article 17 du même règlement et l'intertitre le précédant sont abrogés.

— SOR/2018-99, s. 16(2)

16 (2) Section 18 of the Regulations is replaced by the following:

18 The owner or operator of a mine shall record without delay the data referred to in section 9.1 of Reference Method EPS 1/RM/10, section 8.1 of Reference Method EPS 1/RM/13 and section 8.1 of Reference Method EPS 1/RM/14 for all acute lethality tests that are conducted to monitor deposits from final discharge points.

— DORS/2018-99, par. 16(2)

16 (2) L'article 18 du même règlement est remplacé par ce qui suit :

18 Le propriétaire ou l'exploitant d'une mine enregistre sans délai les données visées à la section 9.1 de la méthode de référence SPE 1/RM/10, à la section 8.1 de la méthode de référence SPE 1/RM/13 et à la section 8.1 de la méthode de référence SPE 1/RM/14 pour tous les essais de détermination de la létalité aiguë effectués dans le cadre du suivi des rejets provenant de points de rejet final.

— SOR/2018-99, s. 18(2)

18 (2) Paragraph 19.1(1)(a) of the Regulations is replaced by the following:

(a) in mg/L for deleterious substances referred to in paragraphs 3(a) to (g) and (i); and

— SOR/2018-99, s. 19(2)

19 (2) Paragraph 20(1)(a) of the Regulations is replaced by the following:

(a) in kg for deleterious substances referred to paragraphs 3(a) to (g) and (i); and

— SOR/2018-99, s. 27(2)

27 (2) Subsection 31.1(1) of the Regulations is replaced by the following:

31.1 (1) If an unauthorized deposit of a deleterious substance occurs, the owner or operator of a mine shall, without delay, collect a grab sample of effluent at the place where the deposit occurred and determine whether the effluent is acutely lethal by conducting tests on aliquots of each effluent sample in accordance with sections 14.1 to 14.3.

— SOR/2018-99, s. 32(2)

32 (2) Schedule 4 to the Regulations is replaced by the Schedule 4 set out in Schedule 2 to these Regulations.

— DORS/2018-99, par. 18(2)

18 (2) L'alinéa 19.1(1)a) du même règlement est remplacé par ce qui suit :

a) la concentration moyenne mensuelle en mg/L des substances nocives énumérées aux alinéas 3a) à g) et i);

— DORS/2018-99, par. 19(2)

19 (2) L'alinéa 20(1)a) du même règlement est remplacé par ce qui suit :

a) la charge en kg des substances nocives énumérées aux alinéas 3a) à g) et i);

— DORS/2018-99, par. 27(2)

27 (2) Le paragraphe 31.1(1) du même règlement est remplacé par ce qui suit :

31.1 (1) En cas de rejet non autorisé d'une substance nocive, le propriétaire ou l'exploitant d'une mine prélève sans délai un échantillon instantané d'effluent sur les lieux du rejet non autorisé et détermine si cet effluent présente une létalité aiguë en effectuant des essais conformément aux articles 14.1 à 14.3, sur des portions aliquotes de chaque échantillon d'effluent prélevé.

— DORS/2018-99, par. 32(2)

32 (2) L'annexe 4 du même règlement est remplacée par l'annexe 4 figurant à l'annexe 2 du présent règlement.

SCHEDULE 4

(Subsection 1(2), subparagraphs 4(1)(a)(i) and (ii), subsection 13(1), paragraph 13(3)(a), subparagraph 22(c)(i) and paragraph 24(1)(a))

Maximum Authorized Concentrations of Prescribed Deleterious Substances

ANNEXE 4

(paragraphe 1(2), sous-alinéas 4(1)a)(i) et (ii), paragraphe 13(1), alinéa 13(3)a), sous-alinéa 22c)(i) et alinéa 24(1)a))

Concentrations maximales permises des substances nocives désignées

TABLE 1

	Column 1	Column 2	Column 3	Column 4
Item	Deleterious Substance	Maximum Authorized Monthly Mean Concentration	Maximum Authorized Concentration in a Composite Sample	Maximum Authorized Concentration in a Grab Sample
1	Arsenic	0.10 mg/L	0.15 mg/L	0.20 mg/L
2	Copper	0.10 mg/L	0.15 mg/L	0.20 mg/L
3	Cyanide	0.50 mg/L	0.75 mg/L	1.00 mg/L

	Column 1	Column 2	Column 3	Column 4
Item	Deleterious Substance	Maximum Authorized Monthly Mean Concentration	Maximum Authorized Concentration in a Composite Sample	Maximum Authorized Concentration in a Grab Sample
4	Lead	0.08 mg/L	0.12 mg/L	0.16 mg/L
5	Nickel	0.25 mg/L	0.38 mg/L	0.50 mg/L
6	Zinc	0.40 mg/L	0.60 mg/L	0.80 mg/L
7	Suspended Solids	15.00 mg/L	22.50 mg/L	30.00 mg/L
8	Radium 226	0.37 Bq/L	0.74 Bq/L	1.11 Bq/L
9	Un-ionized ammonia	0.50 mg/L expressed as nitrogen (N)	Not applicable	1.00 mg/L expressed as nitrogen (N)

TABLEAU 1

	Colonne 1	Colonne 2	Colonne 3	Colonne 4
Article	Substance nocive	Concentration moyenne mensuelle maximale permise	Concentration maximale permise dans un échantillon composite	Concentration maximale permise dans un échantillon instantané
1	Arsenic	0,10 mg/L	0,15 mg/L	0,20 mg/L
2	Cuivre	0,10 mg/L	0,15 mg/L	0,20 mg/L
3	Cyanure	0,50 mg/L	0,75 mg/L	1,00 mg/L
4	Plomb	0,08 mg/L	0,12 mg/L	0,16 mg/L
5	Nickel	0,25 mg/L	0,38 mg/L	0,50 mg/L
6	Zinc	0,40 mg/L	0,60 mg/L	0,80 mg/L
7	Matières en suspension	15,00 mg/L	22,50 mg/L	30,00 mg/L
8	Radium 226	0,37 Bq/L	0,74 Bq/L	1,11 Bq/L
9	Ammoniac non ionisé	0,50 mg/L sous forme d'azote (N)	Sans objet	1,00 mg/L sous forme d'azote (N)

NOTE: The concentrations for items 1 to 8 are total values.

NOTE : Les concentrations pour les articles 1 à 8 sont des valeurs totales.

TABLE 2

	Column 1	Column 2	Column 3	Column 4
Item	Deleterious Substance	Maximum Authorized Monthly Mean Concentration	Maximum Authorized Concentration in a Composite Sample	Maximum Authorized Concentration in a Grab Sample
1	Arsenic	0.30 mg/L	0.45 mg/L	0.60 mg/L
2	Copper	0.30 mg/L	0.45 mg/L	0.60 mg/L
3	Cyanide	0.50 mg/L	0.75 mg/L	1.00 mg/L
4	Lead	0.10 mg/L	0.15 mg/L	0.20 mg/L

Item	Column 1 Deleterious Substance	Column 2 Maximum Authorized Monthly Mean Concentration	Column 3 Maximum Authorized Concentration in a Composite Sample	Column 4 Maximum Authorized Concentration in a Grab Sample
5	Nickel	0.50 mg/L	0.75 mg/L	1.00 mg/L
6	Zinc	0.50 mg/L	0.75 mg/L	1.00 mg/L
7	Suspended Solids	15.00 mg/L	22.50 mg/L	30.00 mg/L
8	Radium 226	0.37 Bq/L	0.74 Bq/L	1.11 Bq/L
9	Un-ionized ammonia	0.50 mg/L expressed as nitrogen (N)	Not applicable	1.00 mg/L expressed as nitrogen (N)

TABLEAU 2

Article	Colonne 1 Substance nocive	Colonne 2 Concentration moyenne mensuelle maximale permise	Colonne 3 Concentration maximale permise dans un échantillon composite	Colonne 4 Concentration maximale permise dans un échantillon instantané
1	Arsenic	0,30 mg/L	0,45 mg/L	0,60 mg/L
2	Cuivre	0,30 mg/L	0,45 mg/L	0,60 mg/L
3	Cyanure	0,50 mg/L	0,75 mg/L	1,00 mg/L
4	Plomb	0,10 mg/L	0,15 mg/L	0,20 mg/L
5	Nickel	0,50 mg/L	0,75 mg/L	1,00 mg/L
6	Zinc	0,50 mg/L	0,75 mg/L	1,00 mg/L
7	Matières en suspension	15,00 mg/L	22,50 mg/L	30,00 mg/L
8	Radium 226	0,37 Bq/L	0,74 Bq/L	1,11 Bq/L
9	Ammoniac non ionisé	0,50 mg/L sous forme d'azote (N)	Sans objet	1,00 mg/L sous forme d'azote (N)

NOTE: The concentrations for items 1 to 8 are total values.

NOTE : Les concentrations pour les articles 1 à 8 sont des valeurs totales.

— SOR/2018-99, ss. 33(2), (3)

33 (2) Schedule 5 to the Regulations is amended by replacing the references after the heading "Schedule 5" with the following:

(Subsections 7(1) and (3), subparagraphs 15(1)(a)(i) and (b)(i) and paragraph 32(1)(c))

(3) Subsection 4(1) of Schedule 5 to the Regulations is amended by adding "and" at the end of paragraph (n), by striking out "and" at the end of paragraph (o) and by repealing paragraph (p).

— DORS/2018-99, par. 33(2) et (3)

33 (2) Les renvois qui suivent le titre « Annexe 5 », à l'annexe 5 du même règlement, sont remplacés par ce qui suit :

(paragraphes 7(1) et (3), sous-alinéas 15(1)a)(i) et b)(i) et alinéa 32(1)c))

(3) L'alinéa 4(1)p) de l'annexe 5 du même règlement est abrogé.

— SOR/2018-99, s. 34(1)

34 (1) Part 2 of Schedule 6 to the Regulations is replaced by the following:

PART 2

Test Results Respecting Each Final Discharge Point

1 Complete the following table with the monthly mean concentration for the deleterious substances set out in the table for each final discharge point and identify the location of the final discharge point.

2 Any measurement not taken because there was no deposit from the final discharge point shall be identified by the letters "NDEP" (No Deposit).

3 Any measurement not taken because no measurement was required in accordance with the conditions set out in section 12 or 13 of these Regulations shall be identified by the letters "NMR" (No Measurement Required).

— DORS/2018-99, par. 34(1)

34 (1) La partie 2 de l'annexe 6 du même règlement est remplacée par ce qui suit :

PARTIE 2

Résultats des essais à chacun des points de rejet final

1 Remplir le tableau suivant pour chaque point de rejet final, identifier son emplacement et indiquer la moyenne mensuelle de la concentration des substances nocives.

2 S'il n'y a pas eu de résultats parce qu'il n'y avait pas de rejet à partir du point de rejet final, inscrire « A.R. » (aucun rejet).

3 S'il n'y a pas eu de mesure parce que l'article 12 ou 13 du présent règlement n'en exigeait aucune, inscrire « A.M.E. » (aucune mesure exigée).

Location of final discharge point:												
Month	As (mg/L)	Cu (mg/L)	CN (mg/L)	Pb (mg/L)	Ni (mg/L)	Zn (mg/L)	SS (mg/L)	Ra 226 (Bq/L)	Un-ionized ammonia (mg/L, expressed as Nitrogen (N))	Lowest pH	Highest pH	Effluent Volume (m^3)
Jan.												
Feb.												
Mar.												
Apr.												
May												
June												
July												
Aug.												
Sept.												
Oct.												
Nov.												
Dec.												

Emplacement du point de rejet final :												
Mois	As (mg/L)	Cu (mg/L)	CN (mg/L)	Pb (mg/L)	Ni (mg/L)	Zn (mg/L)	SS (mg/L)	Ra 226 (Bq/L)	Ammoniac non ionisé (mg/L sous forme d'azote (N))	pH le plus bas	pH le plus haut	Volume d'effluent (m^3)
Janv.												
Févr.												
Mars												
Avr.												
Mai												
Juin												
Juil.												
Août												
Sept.												
Oct.												
Nov.												
Déc.												

— SOR/2018-99, s. 34(3)

34 (3) Part 3 of Schedule 6 to the Regulations is replaced by the following:

— DORS/2018-99, par. 34(3)

34 (3) La partie 3 de l'annexe 6 du même règlement est remplacée par ce qui suit :

PART 3

Results of Acute Lethality Tests

Location of final discharge point:			
Date Sample Collected	Results for Rainbow Trout Acute Lethality Tests (mean percentage mortality in 100% effluent test concentration)	Results for *Daphnia magna* Acute Lethality Tests (mean percentage mortality in 100% effluent test concentration)	Results for Threespine Stickleback Acute Lethality Tests (mean percentage mortality in 100% effluent test concentration)

PARTIE 3

Résultats des essais de détermination de la létalité aiguë

Emplacement du point de rejet final :			
Date du prélèvement de l'échantillon	Résultats des essais de détermination de la létalité aiguë sur la truite arc-en-ciel (pourcentage moyen de mortalité dans l'effluent non dilué)	Résultats des essais de détermination de la létalité aiguë sur la *Daphnia magna* (pourcentage moyen de mortalité dans l'effluent non dilué)	Résultats des essais de détermination de la létalité aiguë sur l'épinoche à trois épines (pourcentage moyen de mortalité dans l'effluent non dilué)

APPENDIX C EMERGENCY RESPONSE TRUCK INVENTORY

The information contained herein is proprietary to Baffinland Iron Mines Corporation and is used solely for the purpose for which it is supplied.
It shall not be disclosed in whole or in part, to any other party, without the express permission in writing by Baffinland Iron Mines Corporation.

Note: This is an UNCONTROLLED COPY. All staff members are responsible to ensure the latest revision is used.

Baffinland

Rescue EMG-005







Equipment checklist **Date:** **Time:** **Inspector:**

N/A - Not Applicable

Compartment	Items		Yes	Condition	Full	Empty	Tested	Comments
Cabin		**Sat Phone**						**Check Battery level**
	1	Safety Glasses clear box						
	1	Safety glasses Darks box						
	1	Binoculars						
	1	Rolls of duck tape						
	2	Care Flare						
	1	Emergency Road kit						
	1	First Aid kit						
	1	Thermal Imaging Camera						**Change with spare battery**
	4	Eyewash						
	1	10 pound fire extinguisher						
1 Left Compartment	**7**	5 Delta Air, 2 Scott 2.2						
	17	SCBA Cylinder						
	21	SCBA face Masks (straps extended)						
	1	Piercing Nozzle with Shut Off						
	1	Red Rope (coil)						
	1	Rit Pack						
	10	Banks Pelican flashlights						
2 Left Compartment	**1**	Step Ladder						
	1	Skill Saw, 1 blade						
	1	Cable Power Puller						
	1	Saws all (reciprocating saw)						
	1	Saws all Blades (kits)						
	3	Drill Bits set						
	1	Cordless drill						
	1	Tape measure						
	1	Socket Set						9mm socket missing
	1	Wrench Set (in tool box)						
	2	Boxes of 30' socks						
	1	roll mech wire						
	1	Tool Box with assorted tools						
	1	Large Bolt Cutters						
	3	Battery Charger						
	8	Batteries Dewalt						
	2	Battery Milwakee						
	1	Charger & battery TIC						
	1	Safety Glasses (box) Assorted						
	1	Small Axe						
	1	Small Bolt Cutters						
	1	Haligan Bar						
	2	Axe						
	2	Pick Head Axe						
	1	Fire Pole						
	1	Steel Jerry can (gas)						
	1	Plastic Jerry Can (gas)						
	1	portable Fan						**Start and run for 5 min**
	1	Yellow rope (spool)						
		Miscellaneous Oils						
	2	Chop Saw Blade						
	1	Power pack for Jaws of Life						**Start and run for 5 min**
	1	Chain Saw chain						
	1	Duck Tape						
	1	Red Cordless Drill/Charger/Batteries						
3 Left Compartment	**1**	Portable Fan (electric)						
	2	Tarps						
	3	Ratchet Straps						
	1	Air Hammer						
	1	20 ton bottle jack						
	3	Hurst Tool Hose						

	1	Spreader						
	1	Cutter						
	1	Combi Tool						
	1	Ram						
	1	Gloves						
	1	Regulator Assembly						
	2	Air Hoses						
	1	32" Air bag						
	1	13" Air Bag						
	1	1/2 air impact						
	1	80 ton Air bag						
	2	Grizzly Struts						
		Assorted Cribbing						
4 Left Compartment	2	1.5 inch hose (yellow)						
	4	1.5 inch hose (red)						
	3	2.5 inch hose (white)						
	4	2.5 inch hose (red)						
	6	Mustang suits						
	1	Spanners						
	4	1.5 inch nozzle						
	1	3 inch adapter 2.5"						
	1	1.5" plastic Nozzle						
	2	10 lbs. extinguisher						
	1	6" connector pipe for portatanks						
	1	Rolligliss 550						
		Wood (cribbing)						
	1	Chainsaw						**Start and run for 5 min**
	1	Rescue Saw						**Start and run for 5 min**
	2	20lbs fire extinguisher						
5 Left Compartment	6	Exo Fit harness						
	1	Rollglis R 550						
	6	Self Inflatable Life vests						
	4	Boots (pairs) (Hip waiters)						
	3	Rescue rope (200 foot bags)						
	1	Tripod straps and pullies (bag)Top of ARFF						
	4	Climbing harness						
	3	Petzl AVAO Harness						
	1	Edge covers (bag)						
	8	Rock climbing helmet						
	1	Rescue ring						
	1	Life jackets (bag) of 4						
	9	Air horn						
	1	Kovak Ice drillkit						
	1	Bag assorted webbing straps						
	2	Mini 4:1						
	3	Bags of Caribiner						
	1	Bag Prusick						
	1	Pelican case Assorted High angle rescue gear						
	2	Assender kits						
	4	Pylons						
	2	Beam Clamps						
	1	Rope Launcher						
	2	400' rope bags						
	2	Confined space SCBA (Black case						
	5	6' lanyard						
	2	Telescopic reach pole						
1 Right Compartment	16	Orange blankets						
	1	Kendrick Extrication Device (KED)						
	8	Folding stretchers						
	1	White plastic rigid Leg splint						
	8	Safety vests						
	4	Misc. rigid splints (sets) (orange bag)						
	1	6 Bank Radio Charger (5 batterys)						
	1	Ferno Stair chair						
	2	Spider Straps						
	1	Burn kit						
	2	Neck brace						
	5	Quick connect straps (back board)						
	3	Trauma bag (red)						**Check Expiry Data (Burn Kits, Sterile water)**
	4	CID blocks (orange)						
	2	Flashlights (Box) MAG lites						
	1	Incident Command Board						

	3	Roll Caution tape						
	3	Roll Danger tape						
	1	SKED						
	1	SCBA Mask cleaning wipes						
	1	Bag stretcher cover						
	1	Nutragrain bars						
	2	Basket Stretcher kits (complete)						
2 Right Compartment	1	Empty Cube Totes						
	1	6" tube for portable tank						
		Diaphragm pump (Hoses)						
3 Right Compartment	3	Quatrex bags (white)						
	2	Lithium fire extinguisher						
	2	Magnesium fire extinguisher						
	4	Grey spill pads						
	4	12x 18 tarp						
	2	Boxes of 30' sock						
	2	Backboard						
	1	Water bottle/sleeve cups						
	9	coveralls						
	1	4 white spill pads						
4 Right Compartment	1	1000 VSG Bladder						
	1	5000 VSG Bladder						
	1	15000 VSG Bladder						
	5	Quatrex bags (black)						
	3	Bladder repair kits						
	1	4X4 duck pond						
	2	Box 30' spill boom						
	3	Bladder fitting kit						
5 Right Compartment	1	Spade						
	2	Mass Casualty Kits						**Check Expiry Data (Burn Kits, Sterile water)**
	2	Rake						
	1	Push broom						
	2	Shovel (square head)						
	2	Chicken wire (roll)						
	12	Long gloves (pair)						
	6	Extension cord						
	1	Honda GX 270 trash pump						**Start and run for 5 min**
	1	3 inch flat hose						
	3	Tyvek coveralls (box)						
	1	Funnel						
	1	Gap seal; 20 L bucket (plug agent)						
	1	Scoop						
	3	3 inch x 10 foot spill booms (box)						
	4	Cones						
	2	Dumpster liners						
	1	Box of Garbage bags						
	3	Spill pads white						
	1	Honda generator						**Start and run for 5 min**
	4	spill pads Grey						

MRT Emergency Response Truck

Right Side:



Left Side:



APPENDIX D MINE SITE SPILL KIT INVENTORY AND LOCATIONS

The information contained herein is proprietary to Baffinland Iron Mines Corporation and is used solely for the purpose for which it is supplied.
It shall not be disclosed in whole or in part, to any other party, without the express permission in writing by Baffinland Iron Mines Corporation.

Note: This is an UNCONTROLLED COPY. All staff members are responsible to ensure the latest revision is used.

557 750 E
558 500 E
559 250 E
560 000 E
560 750 E
561 500 E
7 914 500 N
7 913 750 N
7 913 000 N
7 912 250 N
7 911 500 N
CAMP LAKE
SHEARDOWN LAKE
AIRSTRIP
EXPLORATION CAMP FACILITIES
ACCOMMODATION CAMP
ACCOMMODATION CAMP

LEGEND - SPILL KITS:

1. 104 LAYDOWN
2. EMULSION PLANT
3. FP 1
4. FP 2
5. DIESEL MODULE 1
6. DIESEL MODULE 2
7. WWTP
8. MRT
9. WELDING SHOP 1
10. WELDING SHOP 2
11. MTC SHOP 1
12. MTC SHOP 2
13. MTC SHOP 3
14. MTC SHOP 4
15. MTC SHOP 5
16. MTC SHOP 6
17. MTC SHOP 7
18. WASH BAY 1
19. WASH BAY 2
20. WASH BAY 3
21. WASH BAY 4
22. WASH BAY 5
23. TOROMONT 1
24. TOROMONT 2
25. TOROMONT 3
26. TOROMONT 4
27. CRUSHER 1
28. CRUSHER 2
29. CRUSHER 3
30. CRUSHER 4
31. CRUSHER 5
32. CRUSHER 6
33. CRUSHER POND
34. NEW CAMP PAD 1
35. NEW CAMP PAD 2
36. NEW CAMP PAD 3
37. NEW CAMP PAD 4
38. NEW CAMP PAD 5
39. NEW CAMP PAD 6
40. OHT LAYDOWN
41. LAYDOWN
42. QUARRY
43. JET A TANK
44. FIGHT OPS 1
45. FIGHT OPS 2
46. SITE SERVICE SHOP
47. WAREHOUSE
48. HWB 6
49. INCINERATOR BUILDING
50. HWB 1
51. HWB 2
52. HWB 3
53. HWB 4
54. HWB 5
55. HELI PAD FUEL STATION
56. WEATHER HAVEN
57. ENVIRONMENT LAYDOWN

LEGEND:

- INUIT OWNED LAND - SURFACE ONLY EXCLUDING MINERALS
- INUIT OWNED LAND - SURFACE AND SUBSURFACE INCLUDING MINERALS
- WATER
- QUARRY AREA (EXISTING UNDER Q13C301)
- RIVER/STREAM/DRAINAGE
- ROAD
- QIA SURFACE COMMERCIAL LEASE BOUNDARY
- SPILL KIT LOCATION

NOTES:

1. COORDINATE GRID IS UTM NAD83 ZONE 17N.
2. TOPOGRAPHY PROVIDED BY EAGLE MAPPING (2005).
3. PLAN BASED ON INFORMATION PROVIDED BY HATCH, DATED JAN 13, 2015, AND 2017.
4. CONTOUR INTERVAL IS 2.5 METRES.

SCALE A 150 75 0 250 500 750 m

REV	DATE	DESCRIPTION	DESIGNED	DRAWN	REVIEWED
0	02NOV'17	ISSUED WITH TRANSMITTAL	RAC	MMD	CD

Baffinland

MARY RIVER PROJECT

MINE SITE SPILL KIT LOCATIONS

Knight Piésold CONSULTING

P/A NO. NB102-181/41

REF NO. NB17-00729

FIGURE 2

REV 0

SAVED: I:\1\02\00181\41\A\Cad\FIGS\B11 r0 11/2/2017 3:09:41 PM, MDEMERS PRINTED: 11/2/2017 3:13:13 PM, PLAN, MDEMERS
XREF FILES: Contours-2.5m_Intervel-Mine_to_Mary_Site-02-Oct_16_2003; MINE SITE LAYOUT; XX-TOPO-BASE-LAND-I-SE; C-CLAS; MAGE FILLES; GIS Baffinland Logo mitne_ateit_wo3745_wv2_wo3_aug2016_ate29 mitne_ateit_wo3745_wv2_wo3_aug2016_ate20 mitne_ateit_wo3745_wv2_wo3_aug2016_tde27

Inventory of Typical Spill Kits	
Amount	**Description**
1	30 Gallon Drum with Lid
50	Sorbent Pads
4	Sorbent Socks
2	Sorbent Booms
1	Shaker of Safety Sorb
1	Neoprene Drain Cover
1	Disposable Bag
2 Pair	Safety Goggles
2 Pair	Nitrile Gloves

* Best efforts are made to ensure spill kits remain fully stocked at their designated locations.

APPENDIX E NT-NU SPILL REPORT FORM

The information contained herein is proprietary to Baffinland Iron Mines Corporation and is used solely for the purpose for which it is supplied.
It shall not be disclosed in whole or in part, to any other party, without the express permission in writing by Baffinland Iron Mines Corporation.

Note: This is an UNCONTROLLED COPY. All staff members are responsible to ensure the latest revision is used.

NT-NU SPILL REPORT

OIL, GASOLINE, CHEMICALS AND OTHER HAZARDOUS MATERIALS

NT-NU 24-HOUR SPILL REPORT LINE
TEL: (867) 920-8130
FAX: (867) 873-6924
EMAIL: spills@gov.nt.ca

REPORT LINE USE ONLY

A	REPORT DATE: MONTH – DAY – YEAR	REPORT TIME	☐ ORIGINAL SPILL REPORT, OR ☐ UPDATE # _____ TO THE ORIGINAL SPILL REPORT	REPORT NUMBER ____-_____
B	OCCURRENCE DATE: MONTH – DAY – YEAR	OCCURRENCE TIME		

C	LAND USE PERMIT NUMBER (IF APPLICABLE)	WATER LICENCE NUMBER (IF APPLICABLE)
D	GEOGRAPHIC PLACE NAME OR DISTANCE AND DIRECTION FROM NAMED LOCATION	REGION ☐ NWT ☐ NUNAVUT ☐ ADJACENT JURISDICTION OR OCEAN
E	LATITUDE DEGREES MINUTES SECONDS	LONGITUDE DEGREES MINUTES SECONDS

F	RESPONSIBLE PARTY OR VESSEL NAME	RESPONSIBLE PARTY ADDRESS OR OFFICE LOCATION	
G	ANY CONTRACTOR INVOLVED	CONTRACTOR ADDRESS OR OFFICE LOCATION	
H	PRODUCT SPILLED	QUANTITY IN LITRES, KILOGRAMS OR CUBIC METRES	U.N. NUMBER
	SECOND PRODUCT SPILLED (IF APPLICABLE)	QUANTITY IN LITRES, KILOGRAMS OR CUBIC METRES	U.N. NUMBER
I	SPILL SOURCE	SPILL CAUSE	AREA OF CONTAMINATION IN SQUARE METRES
J	FACTORS AFFECTING SPILL OR RECOVERY	DESCRIBE ANY ASSISTANCE REQUIRED	HAZARDS TO PERSONS, PROPERTY OR ENVIRONMENT
K	ADDITIONAL INFORMATION, COMMENTS, ACTIONS PROPOSED OR TAKEN TO CONTAIN, RECOVER OR DISPOSE OF SPILLED PRODUCT AND CONTAMINATED MATERIALS		

L	REPORTED TO SPILL LINE BY	POSITION	EMPLOYER	LOCATION CALLING FROM	TELEPHONE
M	ANY ALTERNATE CONTACT	POSITION	EMPLOYER	ALTERNATE CONTACT LOCATION	ALTERNATE TELEPHONE

REPORT LINE USE ONLY

N	RECEIVED AT SPILL LINE BY	POSITION STATION OPERATOR	EMPLOYER	LOCATION CALLED YELLOWKNIFE, NT	REPORT LINE NUMBER (867) 920-8130

LEAD AGENCY ☐ EC ☐ CCG ☐ GNWT ☐ GN ☐ ILA ☐ INAC ☐ NEB ☐ TC | SIGNIFICANCE ☐ MINOR ☐ MAJOR ☐ UNKNOWN | FILE STATUS ☐ OPEN ☐ CLOSED

AGENCY	CONTACT NAME	CONTACT TIME	REMARKS
LEAD AGENCY			
FIRST SUPPORT AGENCY			
SECOND SUPPORT AGENCY			
THIRD SUPPORT AGENCY			

APPENDIX F WASTE POND WATER TREATMENT PLANT OPERATIONS

The information contained herein is proprietary to Baffinland Iron Mines Corporation and is used solely for the purpose for which it is supplied.
It shall not be disclosed in whole or in part, to any other party, without the express permission in writing by Baffinland Iron Mines Corporation.

Note: This is an UNCONTROLLED COPY. All staff members are responsible to ensure the latest revision is used.

Baffinland Iron Mines Corporation

Waste Pond Water Treatment Plant Operations

Rev 1.0

Prepared By: Chet Fong
Department: Mine Operations
Title: Senior Mining Engineer
Date: 17/08/2018
Signature:

Approved By: Simon Fleury
Department: Mine Operations
Title: Mine Manager
Date: 17/08/2018
Signature: Simon L. Fleury

The information contained herein is proprietary to Baffinland Iron Mines Corporation and is used solely for the purpose for which it is supplied.
It shall not be disclosed in whole or in part, to any other party, without the express permission in writing by Baffinland Iron Mines Corporation.

Note: This is an UNCONTROLLED COPY. All staff members are responsible to ensure the latest revision is used.

DOCUMENT REVISION RECORD

Issue Date MM/DD/YY	Revision	Prepared By	Approved By	Issue Purpose
08/17/18	V1.0	CF		Initial

The information contained herein is proprietary to Baffinland Iron Mines Corporation and is used solely for the purpose for which it is supplied.
It shall not be disclosed in whole or in part, to any other party, without the express permission in writing by Baffinland Iron Mines Corporation.

Note: This is an UNCONTROLLED COPY. All staff members are responsible to ensure the latest revision is used.

TABLE OF CONTENTS

1 PURPOSE 4

2 SCOPE 4

2.1 EXEMPTIONS 4

3 RESPONSIBILITES 4

4 Procedures 4

4.1 plant operations 5

4.2 Plant Start up 6

4.3 Plant Shut Down 6

4.4 Discharging 6

4.5 Chemical dosing 7

4.5.1 Ferric sulphate – liquid 7

4.5.2 Lime – bags 8

4.5.3 Polymer – bags 8

4.6 System Automation 8

4.7 Trouble Shooting 8

4.8 Accident response 8

4.8.1 response equipment available 8

4.8.2 Spills on the ground 9

4.8.3 Spills on person 9

4.8.4 Lime in eyes 9

4.8.5 Lime spill 9

4.8.6 Tank leak ..... **Error! Bookmark not defined.**

4.8.7 Hose leak ..... **Error! Bookmark not defined.**

4.9 APPENDICIES 9

The information contained herein is proprietary to Baffinland Iron Mines Corporation and is used solely for the purpose for which it is supplied.
It shall not be disclosed in whole or in part, to any other party, without the express permission in writing by Baffinland Iron Mines Corporation.

Note: This is an UNCONTROLLED COPY. All staff members are responsible to ensure the latest revision is used.

1 PURPOSE

This document outlines the basic procedure to safely operate the Water Treatment Plant

2 SCOPE

This document will cover the basic operations of the plant, including start up and shut down, monitoring, treatment, and emergency protocols and procedures for at risk activities at the Water Treatment Plant.

2.1 EXEMPTIONS

This document does not include instructions related to water treatment, which can be found in the plant Operations and Maintenance Manual.

3 RESPONSIBILITES

Any visitor shall request permission to the plant operator prior to entering the work area. In the absence of an operator, permission shall be requested to the mine supervisor.

The Plant operator shall ensure that everyone working in the plant wears the requisite PPE according to the activities being performed (e.g. chemical handling).

4 PROCEDURES

The information in this section is intended as a summary of plant operations. In the case of a discrepancy between this document and the Operations and Maintenance Manual, the latter will take precedence.

For full details on design and plant operation, refer to the operator's manual. In standard operations, the WTP is intended to draw water from the Waste Dump Pond and treat the intake water in 3 steps inside the WTP structure. The water is then discharged to a Geotube Settling Pond, where a fourth treatment step of settlement will occur, before water is either discharged into the environment or, if not compliant, recirculated back to the Waste Dump Pond.

The three steps of treatment involve the injection of chemical into temporary storage tanks.

- Step 1 – Iron Precipitation
- Step 2 – Hydroxide Precipitation and pH Adjustment

The information contained herein is proprietary to Baffinland Iron Mines Corporation and is used solely for the purpose for which it is supplied.
It shall not be disclosed in whole or in part, to any other party, without the express permission in writing by Baffinland Iron Mines Corporation.

Note: This is an UNCONTROLLED COPY. All staff members are responsible to ensure the latest revision is used.

- Step 3 – Flocculation
- Step 4 - Filtration

Steps 1-3 occur inside the WTP structure, with the 4th step taking place in the Geotube Settling Pond.

4.1 PLANT OPERATIONS

Plant operations consists primarily of managing flow, dosage and water levels across the pond, sump, and tanks. Flow is managed with a combination of control panel adjustments and manual valve manipulations.

The plant consists of the following components:

1. Intake Pump – pulls water from the Waste Dump Pond into the WTP
2. Onion tanks – water is stored for treatment prior to discharge. There are two trains, which can be run independently or concurrently.
3. Control panel – use to remotely manage pumps – can be set for automatic and manual operations
4. Dosing pumps – use to inject chemical into onion tanks at a fixed rate
5. Dosing tanks – mixing tanks from which chemicals (Lime, Polymer) is depleted at a configurable rate
6. Transfer pumps – used to take treated water from the plant out to the Geotube Pond
7. Geotube Pond – discharge from the plant is deposited here for particulate settlement prior to final discharge.
8. Discharge pump – used to pull treated water from the Geotube Pond to either be discharged into the environment or recirculated back to the Waste Dump Pond.
9. Blower motors – used to agitate water in onion tanks during treatment to ensure more even dispersion of chemicals.

Once the Plant is operational, the operator will commence with monitoring the measured levels of pH and suspended solids with built in instrumentations and gauges. These readings may be corroborated with manual instrumentations such as a YSI meter.

When readings indicate pH readings at the desired values, the operator shall then initiate discharging of water into the Geotube Pond. This water is allowed to percolate through the Geotube, which catches particulates as a filter. Once in the Sump, where any remaining particulates are then captured and settle into the bottom of the pond.

Water is discharged from this Geotube Pond, either directly into the environment or back into the Waste Dump Pond. The maximum flow rate for these discharging is 1200 gal/min, this limit imposed by the flowmeter installed.

At design capacity, the intake pump(s) should be able to pull water into the WTP for treatment at an equal rate to the discharge pump. The plant effectively runs continuously with dosing in-stream.

The information contained herein is proprietary to Baffinland Iron Mines Corporation and is used solely for the purpose for which it is supplied.
It shall not be disclosed in whole or in part, to any other party, without the express permission in writing by Baffinland Iron Mines Corporation.

Note: This is an UNCONTROLLED COPY. All staff members are responsible to ensure the latest revision is used.

4.2 Plant Start up

The following steps should be undertaken when starting up the WTP.

1. Ensure blower motors are activated.
2. Ensure all the Valves to the Geotube Sump are open.
3. Ensure the transfer pumps are switched to automatic
4. Check that all the intake valves are open
5. Keep valves open between tanks on each train
6. Start up intake pump and adjust pressure accordingly. To do this, adjust the following:
    a. Rpm of the pump
    b. Valve openings
7. Start Ferric Sulphate Dosing system. Ensure intake is in the Ferric Sulphate barrels, and there are no leaks present. Pumps should be activated.
8. Start Lime Dosing system. Dosing pumps should be activated.
9. Start up Polymer Dosing System. Dosing pumps should be activated

Plant operations can now commence.

4.3 Plant Shut Down

Plant shut down can be undertaken when it is to be unmanned for a longer period of time (eg. More than 2 shifts) within the same system (for winter decommissioning, procedure XXX). To run a plant shut down

1. Shut all intake valves
2. Shut all Ferric Sulphate dosing equipment
3. Shut all Lime dosing equipment
4. shut all Polymer dosing equipment
5. Rinse Lime lines (reference other procedure)

Plant can now be shut down. This procedure can be utilized with the onion tanks full. This should also be done before any interruptions in power due to generator maintenance or other causes.

4.4 Discharging

Discharging be undertaken whenever the plant is running. It is most efficient to run the discharge when there is moderate to high water levels in the Geotube Sump. The intake hose for the Geotube Sump should utilize the ring to ensure that drawn water is from the top of the water surface.

Discharging requires the manual operation of the valves to discharge the water either to the environment or back to the Waste Dump Pond. Readings should also be checked and logged on the flowmeter when discharge begins using the totalizer values.

The information contained herein is proprietary to Baffinland Iron Mines Corporation and is used solely for the purpose for which it is supplied.
It shall not be disclosed in whole or in part, to any other party, without the express permission in writing by Baffinland Iron Mines Corporation.

Note: This is an UNCONTROLLED COPY. All staff members are responsible to ensure the latest revision is used.

NOTE: discharge flow rate should be kept below 1200 gal/min, as flow greater than this will not be measureable.

To discharge, the following steps should be undertaken:

1. Ensure enough water to discharge. Water levels should be at least 50 centimetres from the bottom of the sump prior to beginning discharge.
2. Ensure valve on re-circulation line is closed. This will enable the water to discharge into the environment. Where re-circulation is required, close the valve on the discharge line and open the valve on the re-circulation line.
3. If discharging to the environment, check the totalizer reading on the flowmeter prior to discharge. This is not required if re-circulating.
4. On the control panel, Set discharge to "on"
5. While discharging, check discharge pH and Turbidity with sampling tap periodically. Samples can be collected and tested using YSI instrument.
6. When discharging is complete or to be disabled, go to control panel and set discharge to "off"

4.5 CHEMICAL DOSING

Chemical dosing is performed as part of the treatment process. The primary drivers for chemical dosing is:

1. Reduce the pH
2. Reduce the suspended solids

Prior to discharging water back into the environment.

As dosing quantities will vary depending on flow rate and water qualities, refer to user manual for dosing quantities.

Dosing procedures will vary slightly between the stages of treatment. The three stages that require chemical intervention are Ferric Sulphate, Lime, and Polymer.

4.5.1 FERRIC SULPHATE – LIQUID

PPE Required: long chemical resistant gloves, apron, face shield, standard PPE

- Prepare a barrel for dosing by placing the barrel into the duck pond by the ferric sulphate dosing area and removing the top seal.
- Put 2 dosing pumps into 1 barrel (1 per train)
- Switch on dosing pump on the control panel
- On the pump, check frequency and stroke length to ensure dosage is as expected.
- To change barrels, switch off on the dosing pump and change barrel

The information contained herein is proprietary to Baffinland Iron Mines Corporation and is used solely for the purpose for which it is supplied.
It shall not be disclosed in whole or in part, to any other party, without the express permission in writing by Baffinland Iron Mines Corporation.

Note: This is an UNCONTROLLED COPY. All staff members are responsible to ensure the latest revision is used.

4.5.2 LIME – BAGS

PPE Required: long chemical resistant gloves, respirator, face shield, respirator, standard PPE

- Fill mixing tank with intake water.
- Check filter on accessory intake water line (dedicated line for filling lime and polymer mixing tanks)
- Open valve on AI water line (fill tank). Fill to required water levels
- Ensure mixer is operating
- Add lime to water

4.5.3 POLYMER – BAGS

PPE Required: standard PPE

- Fill mixing tank with intake water.
- Check filter on accessory intake water line (dedicated line for filling lime and polymer mixing tanks)
- Open valve on AI water line (fill tank). Fill to required water levels
- Ensure mixer is operating
- Add polymer to water

4.6 SYSTEM AUTOMATION

For instruction on System Automation, please refer to the Operations and Maintenance Manual.

4.7 TROUBLE SHOOTING

For issue identification, please refer to the checklists in the Operations and Maintenance Manual.

4.8 ACCIDENT RESPONSE

As the WTP involves the handling of a number of chemicals that may be harmful, precautions must be taken to ensure all personnel who are in the work area are informed of the hazards and the preventative and treatment measures.

4.8.1 RESPONSE EQUIPMENT AVAILABLE

The WTP is equipped with a stationary emergency shower, 2 portable emergency shower stations and eyewash stations (dual purpose), 2 fire extinguishers, and 1 stationary eyewash station.

Additionally, the WTP is equipped with spare PPE, face shields, respirators, chemical resistant gloves, hearing protection, and spill kits.

The information contained herein is proprietary to Baffinland Iron Mines Corporation and is used solely for the purpose for which it is supplied.
It shall not be disclosed in whole or in part, to any other party, without the express permission in writing by Baffinland Iron Mines Corporation.

Note: This is an UNCONTROLLED COPY. All staff members are responsible to ensure the latest revision is used.

There are also patch kits for the onion tanks, hose and fitting replacements, tools, and a base station radio available at the WTP.

In the event that an incident occurs that requires emergency response, same basic steps should be immediately undertaken. The following lists some of the possible situations and a brief of the response steps.

4.8.2 Spills on the ground

- Retrieve spill pad kit
- use gloves to handle
- dispose in drum
- Label and dispose.

4.8.3 Spills on person

- Proceed to stationary emergency shower
- Notify secondary operator
- Secondary operator activates pump switch
- Pull handle and rinse for 10 mins
- If unable to proceed to stationary emergency shower, refer to “emergency response procedure”

4.8.4 Lime in eyes

- If possible, proceed immediately to emergency eyewash station
- Activate emergency eyewash and rinse for 10 mins.
- Repeat if required
- Notify secondary operator
- If unable to proceed to emergency eyewash station, refer to “emergency response procedure”

4.8.5 Lime spill

- Retrieve spill pad kit
- use gloves to handle
- dispose in drum
- Label and dispose.

4.9 APPENDICIES

Appendix A – Operations and Maintenance Manual for Mary River Mine Waste Rock Pile Water Treatment Plant

The information contained herein is proprietary to Baffinland Iron Mines Corporation and is used solely for the purpose for which it is supplied.
It shall not be disclosed in whole or in part, to any other party, without the express permission in writing by Baffinland Iron Mines Corporation.

Note: This is an UNCONTROLLED COPY. All staff members are responsible to ensure the latest revision is used.

APPENDIX A – OPERATIONS & MAINTENANCE MANUAL FOR MARY RIVER MINE WASTE ROCK PILE WATER TREATMENT PLANT
20180817_v02

The information contained herein is proprietary to Baffinland Iron Mines Corporation and is used solely for the purpose for which it is supplied.
It shall not be disclosed in whole or in part, to any other party, without the express permission in writing by Baffinland Iron Mines Corporation.

Note: This is an UNCONTROLLED COPY. All staff members are responsible to ensure the latest revision is used.

OPERATIONS & MAINTENANCE MANUAL FOR MARY RIVER MINE WASTE ROCK PILE WATER TREATMENT PLANT 20180817_v02

Baffinland Iron Mines Corporation

Prepared by:

McCue Engineering Contractors
203-8291 92 Street
Delta, BC
V4G 0A4

Project No. 137-0001

This report is confidential and remains the property of McCue Environmental Contracting Inc. Distribution of this report, whole or in part, is not permitted without written permission from the author.

TABLE OF CONTENTS

Page

TABLE OF CONTENTS i

1.0 INTRODUCTION 1

2.0 PLANT OVERVIEW 1
- 2.1 General Process Description 1
- 2.2 Brief Process Overview 1
  - 2.2.1 System Inlet 1
  - 2.2.2 Step 1 – Iron Precipitation 2
  - 2.2.3 Step 2 – Hydroxide Precipitation and pH Adjustment 2
  - 2.2.4 Step 3 – Flocculation 2
  - 2.2.5 Step 4 – Filtration 3
- 2.3 Major Equipment List 3
- 2.4 System Automation 5

3.0 GENERAL STARTUP PROCEDURE 9
- 3.1 After Dormancy Pre-start-up Procedures 9
- 3.2 Commissioning 10
  - 3.2.1 Hydrated Lime Pump / Polymer Pump 10
  - 3.2.2 Blowers 10
  - 3.2.3 Ferric Pump 11
  - 3.2.4 Motorized Valve 11
  - 3.2.5 Diesel Pumps 11
  - 3.2.6 pH Sensors 12
  - 3.2.7 Geotube 12

4.0 OPERATION 12
- 4.1 General Operating Instructions 12
- 4.2 Operating Procedure 13
  - 4.2.1 Standard Operation 13
- 4.3 Daily Operator Checklist 15

APPENDIX A –DRAWINGS 17

APPENDIX B - MONITORING 24

1.0 INTRODUCTION

This documents outlines the Operations Manual for Baffinland Iron Mine Corporation's (BIM) Mary River Mine Waste Rock Pile water treatment plant (WTP).

2.0 PLANT OVERVIEW

2.1 General Process Description

The WTP employs a process of coagulation, pH adjustment, flocculation, and filtration to treat acid rock surface runoff collected in the pond at the base of the waste rock pile. The objective of the system operation is to treat water to within the parameters outlined in the Metal Mining Effluent Regulations (MMER), as specified to McCue by BIM, and summarized in Table 1.

Table 1: MMER Effluent Limits

Parameter	Unit	Maximum Authorized Monthly Mean Concentration	Maximum Authorized Concentrations in a Composite Sample	Maximum Authorized Concentration in a Grab Sample
Arsenic	mg/L	0.5	0.75	1.00
Copper	mg/L	0.3	0.45	0.60
Cyanide	NTU	1.00	1.50	2.00
Lead	mg/L	0.20	0.30	0.40
Nickel	mg/L	0.50	0.75	1.00
Zinc	mg/L	0.50	0.75	1.00
Total Suspended Solids	mg/L	15.00	22.50	30.00
Radium 226	Bq/L	0.37	0.74	1.11
pH	SU	6-9.5	6-9.5	6-9.5

The treatment steps are described in Section 2.2. Refer to drawings in Appendix A:

2.2 Brief Process Overview

2.2.1 *System Inlet*

Water is collected at an inlet storage pond (P-001) where it is held for treatment. Two diesel powered centrifugal trash pumps (PU-100A/B) are used to transfer water from the storage pond to an equipment enclosure where the WTP is housed.

At the WTP, the flow can be divided into two separate treatment trains (1 and 2), with each train having a flow meter on the inlet line to monitor flow.

Water is directed into two reactor tanks (TA-110 and TA-210) for processing.

2.2.2 *Step 1 – Iron Precipitation*

Ferric sulphate solution is injected into TA-110 and TA-210 to promote coagulation and precipitation of some heavy metals.

As of system commissioning in June 2018, ferric sulphate liquid solution (12% Fe) is used and injected directly into the process. Each process train utilizes an independent chemical pump to introduce chemical into the system.

The WTS also includes a ferric sulphate make down system, including a holding tank and mixer to allow for makeup of solution using dry ferric sulphate.

Each reactor tank includes a pH sensor to provide continuous monitoring of pH.

Each reactor tank is equipped with four air diffusers which supply air to the process and provide continuous mixing so that solids are kept suspended. Each train is supplied air by a dedicated blower.

2.2.3 *Step 2 – Hydroxide Precipitation and pH Adjustment*

Water flows by gravity from TA-110 and TA-210 to TA-120 and TA-220 respectively. Here, hydrated lime is injected into the process to increase pH and aid in further precipitation of some metals through hydroxide precipitation.

Hydrated lime solution is made manually by adding dry hydrated lime and raw influent water to a mixing tank (TA-020). A mixer is run continuously to ensure the hydrated lime slurry does not solidify.

One hydrated lime chemical pump is utilized to dose each reactor tank with chemical. Two motorized valves (MV-120 and MV-220) are used to control the flow of lime to each reactor tank. Each reactor tank includes a pH sensor to provide continuous monitoring of pH.

Each reactor tank is equipped with four air diffusers which supply air to the process and provide continuous mixing so that solids are kept suspended. Each train is supplied air by a dedicated blower.

2.2.4 *Step 3 – Flocculation*

Water flows by gravity from TA-120 and TA-220 to TA-130 and TA-230 respectively. Here, polymer is injected into the process to aid in flocculation of suspended solids prior to filtration.
Polymer solution is made manually by adding dry polymer and raw influent water to a mixing tank (TA-030). A mixer is run continuously to ensure uniformity of the polymer solution.

Two polymer chemical pumps are utilized to provide polymer dosing to each train. Polymer can be dosed directly into each reactor tank, or inline through a static mixer located directly downstream of the reactor tank.

2.2.5 *Step 4 – Filtration*

Water from TA-130 and TA-230 is pumped to a geotube pond via two diesel powered centrifugal trash pumps (PU-200A/B).

Water is directed to a manifold where it can be distributed to two geotube bags for solids filtration. Two additional geotube bags can be deployed in the pond once the currently operating geotube bags have reached capacity. These spare geotubes are currently stored in a warehouse for future use.

Filtered water leaves the geotube bags and is directed to a collection point at the North West corner of the pond. From here, water is pumped via one diesel trash pump (PU-300) to the Mary River discharge point, or recycled back to the inlet pond. A flow meter is installed on the discharge line to Mary River to allow for data logging of flow.

2.3 Major Equipment List

The WTP layout is provided in appendix A. A list of major equipment is provided in Table 2.

Table 2: Major WTP Equipment

Equipment	Description	Qty	Drawing Reference (If Available)
Pond Transfer Pump	Model: Prime Aire PA4A60-404ST Power: Diesel Driven Capacity: 140m3/hr	2	PU-100 A / PU-100 B
Inlet Flow Meter	Model: GF Signet 3-2551-P1-42	2	FT-100 / FT-200
Ferric Reaction Tank	Material: Polyurethane Size: 5.9m W x 1.5 H Capacity: 24,820 Liters	2	TA-110 / TA-210
Lime Reaction Tank	Material: Polyurethane Size: 5.9m W x 1.5 H Capacity: 24,820 Liters	2	TA-120 / TA-220
Polymer Reaction Tank	Material: Polyurethane Size: 5.9m W x 1.5 H Capacity: 24,820 Liters	2	TA-130 / TA-230
Aeration Blowers	Gast R7100A-3 Blower • 208 V / 3 HP / 60 Hz	2	BL-100A / BL-100B
pH Controller and Sensors	Model: Walchem W900 (Controller) Model: Walchem WEL-PHF-NN (Sensors)	1	pH-110/120/210/220
Motorized Ball Valve	Hayward 1” Ball Valve Model: HRSN2	2	MV-120 and MV-220
Level Transmitter	Model: Echosonic 11 LU27	2	LT-130 / LT-230
Bag Filter	Model: FTI830-2P-150-CS-BS-P13-DP Bag Size: 5 Micron	1	FIL-100
Ferric Chemical Pump	Model: Walchem EHE31E1-VC Power: 115 VAC/1hp/60Hz Capacity: 1 LPM @ 105m TDH	2	PU-010A / PU-010B
Lime Chemical Pump	Model: Flowmotion FR25-HR30HR Power: 230V/3hp/60Hz Capacity: 9.5 LPM @ 105 m TDH	1	PU-020
Polymer Chemical Pump	Model: Flowmotion FR25-HR30HR Power: 230V/3hp/60Hz Capacity: 16.5 LPM @ 105 m TDH	2	PU-030A / PU-030B
Ferric Mixing Tank	Material: Polyurethane Size: Ø 1.2m x 1.3m Height	1	TA-010
Lime Mixing Tank	Material: Polyurethane Size: Ø 1.8m x 1.7m Height	1	TA-020
Polymer Mixing Tank	Material: Polyurethane Size: Ø 1.6m x 1.6m Height	1	TA-030
Coarse Bubble Diffusers	Model: Maxair 24” SS	24	-

2.4 System Automation

The system is automated through a main control panel located in the system enclosure. The system P&ID is provided in Appendix A. Operation is outlined in Table 3.

Table 3: Control Panel Automation

Equipment ID	Equipment Description	Control Logic	PID Control Reference	Controls	Panel Indication
PU – 100 A/B	Inlet Pond Pump	Units can be controlled in Hand or in Auto. Pump will turn on in Hand in Auto or in Hand.	-	-	Pump icon will indicate run status
		Pump will turn off if high level is measured in TA-110 or TA-210	LSH-110 / LSH-210	Auto	High level alarm at panel
		Pump will turn off if high level measured in TA-130 or TA-230	LIT-130 / LIT-230	Auto - High level settable at panel	High level alarm at panel
BL-100 A/B	Blower	Units can be controlled in Hand or in Auto Blower will turn on in Auto or in Hand	-	-	Blower icon will indicate run status
		BL-100 A will turn off if low level is measured by LIT-130	LIT-130	Auto – Low level settable at panel	Low level alarm
		BL-100 B will turn off if low level is measured by LIT-230	LIT-230	Auto – Low level settable at panel	Low level alarm
pH-110	pH Sensor	Continuous monitoring of pH	-	-	Display pH on PLC
pH-210	pH Sensor	Continuous monitoring of pH	-	-	Display pH on PLC

pH-210	pH Sensor	If pH>9.5, close MV-120 - Alarm	MV-120	Auto – pH set point settable at panel	Display pH on PLC
pH-220	pH Dosage	If pH>9, close MV-220 - Alarm	MV-220	Auto – pH set point settable at panel	Display pH on PLC
PU-010A	Ferric Pump	Units can be controlled in Hand or in Auto	-	-	Pump icon will indicate run status
		If FIT-100 measures flow, PU-010A energizes.	FIT-100	Auto	Display run status on PLC
PU-010B	Ferric Pump	Units can be controlled in Hand or in Auto	-	-	Pump icon will indicate run status
		If FIT-200 measures flow, PU-010B energizes.	FIT-100	Auto	Display run status on PLC
PU-020	Lime Pump	Units can be controlled in Hand or in Auto	-	-	Pump icon will indicate run status
		Speed Control (1 train only) If pH-120> 8.5, PU-020 will reduce speed. If pH < 8, pump will increase pump speed. If pH is between 8 to 8.5, pump will maintain pump speed.	pH-110 / pH-120	Auto – pH set point adjustable at panel	Display run status on PLC
		Speed Control Disabled If flow is detected by both trains, speed control is disabled.	FIT-100 / FIT-200	Auto	Display run status on PLC
PU-030 A	Polymer Pump	Units can be controlled in Hand or in Auto	-	-	Pump icon will indicate run status

		Polymer pump energizes if PU-200 A is on	PU-200A	-	Display run status on PLC
PU-030 B	Polymer Pump	Units can be controlled in Hand or in Auto	-	-	Pump icon will indicate run status
		Polymer pump energizes if PU-200 B is on	PU-200B	-	Display run status on PLC
PU-200 A	Transfer Pump	Units can be controlled in Hand or in Auto	-	-	Pump icon will indicate run status
		If LT-130 measures < 3', PU-200A off. If LT-130 measures >3', PU-200A on.	LT-130	Auto – Set points adjustable at panel	Pump icon will indicate run status
		If LT-130 measures >4.5', PU-200A off. If LT-130<4.5', PU-200A on.	LT-130	Auto – Set points adjustable at panel	Pump icon will indicate run status
PU-200 B	Transfer Pump	Units can be controlled in Hand or in Auto	-	-	Pump icon will indicate run status
		If LT-230 measures < 3', PU-200B off. If LT-230 measures >3', PU-200B on.	LT-130	Auto – Set points adjustable at panel	Pump icon will indicate run status
		If LT-230 measures >4.5', PU-200B off. If LT-230<4.5', PU-200B on.	LT-130	Auto – Set points adjustable at panel	Pump icon will indicate run status
PU-300	Discharge Pump	Units can be controlled in Hand or in Auto	-	-	Pump icon will indicate run status
		Pump off at LSL-200	LSL-200	-	Level indicator on panel

		Pump on at LSH-200	LSH-200	-	Level indicator on panel
		High Level Alarm at LSHH-200	LSHH-200	-	High Level Alarm
MX-010 /020/030	Mixer	Units can be controlled on/off manually	-	-	-

3.0 GENERAL STARTUP PROCEDURE

3.1 After Dormancy Pre-start-up Procedures

The following steps shall be taken after extended periods of dormancy, prior to general startup of the WTP.

Task	Check
Perform a visual inspection of the system enclosure for signs of water/snow ingress.	.
Inspect hose and pipe for signs of leaks, abrasion, or other physical damage.	☐
Inspect Reactor tanks as follows: • Signs of leaks, abrasion, or other physical damage. • Tank connections for signs of strain or stress. • Make sure that valves at the inlet and outlet are opened.	☐
Inspect Blowers as follows: • Signs of abrasion, or other physical damage on all external accessories such as relief valves, gauges and filters. • Make sure that valves at the inlet and outlet are opened.	☐
Inspect Diesel Pumps as follows: • Signs of leaks, abrasion, or other physical damage. • Check for and tighten loose attaching hardware. • Make sure that valves at the inlet and outlet are opened. • Check oil levels and lubricate as necessary.	☐
Inspect Ferric Sulphate pump as follows • Signs of leaks, abrasion, or other physical damage. • Make sure that valves at the inlet and outlet are opened.	☐
Inspect Hydrated Lime pumps as follows • Signs of leaks, abrasion, or other physical damage. • Inspect condition of internal pump hose. • Make sure that valves at the inlet and outlet are opened.	☐
Inspect Polymer pump as follows: • Signs of leaks, abrasion, or other physical damage. • Inspect condition of internal pump hose. • Make sure that valves at the inlet and outlet are opened.	☐
Inspect Level Transmitter as follows: • Monitor debris and ensure the sensor is level and mounted perpendicular to water level. • Check and roughly compare measurement on the PLC with the real on the field.	☐
Inspect pH sensors as follows: • Monitor debris and deposition of scaling on the transmitter. Perform a cleaning of the sensors as necessary.	☐

-

Insect Bag Filter vessel as follows: • Signs of leaks, abrasion, or other physical damage. • Inspect filter bag and replace as necessary	☐
Inspect Inlet Flow Meter as follows: • Signs of leaks, abrasion, or other physical damage. • Inspect flow sensor for scaling. Clean as necessary.	☐
Inspect Geotube Bag as follows: • Ensure inlet connection points are securely attached. • Ensure height of bag does not exceed recommended limits. If so, decommission geotube bag. • Clean geotube surface of sediment and scaling to prevent fouling using a push broom, or gentle pressure washing.	☐

3.2 Commissioning

After pre-start-up procedures are completed, the system can be energized. The following procedure reflects a high level overview of equipment checks to be performed. Detailed instructions can be found in the product specific manuals. Before any mechanical intervention, disconnect the electrical supply.

3.2.1 *Hydrated Lime Pump / Polymer Pump*

Task	Check
Ensure that all protections (cover, cover window, ventilator hood, coupling protection) are in place before operating the pump.	☐
Check the direction of rotation of the pump.	☐
Make sure that valves at the inlet and outlet are opened.	☐
Start the pump by checking its direction of rotation through the cover window.	☐
Check the flow and discharge pressure and adjust rollers if these figures don't match the pump specifications.	☐

IMPORTANT: Ensure lime pump valves remains open during operation. Should valves be left in the closed position, the process line can over pressurize, leading to a rupture of the chemical hose.

3.2.2 *Blowers*

Task	Check
Ensure impeller rotation is correct.	☐
Check filters and inspect for signs of fouling. Replace if necessary.	☐

-

Ambient temperature – Check room and discharge air temperatures. Exhaust air should not exceed 135ºC.	☐
Working pressure and vacuum values – Adjust relief valve pressure or vacuum setting, if needed.	☐
Motor current – Check that the supply current matches recommended current rating on product nameplate.	☐
Electrical overload cutout – Check that the current matches the rating on product nameplate.	☐

3.2.3 *Ferric Pump*

Task	Check
Ensure pump is energized.	☐
Make sure that valves at the inlet and outlet are opened.	☐
Start the pump manually, in order to prime and adjust dosing rates.	☐
Prime the pump. See manual for details.	☐
Adjust dosing according to inlet water flow rate. See below.	☐
Check dosing rate with calibration cylinder.	☐

3.2.4 *Motorized Valve*

Task	Check
Ensure valve is energized.	☐
Ensure valve opens/closes reliably in manual mode:	☐

3.2.5 *Diesel Pumps*

Task	Check
Check fuel level and oil levels in the engine, air compressor, pump bearings and seal housing.	☐
Consult engine operations manual before attempting to start the unit.	☐
Allow pump to prime.	☐
Adjust engine speed to desired output.	☐

3.2.6 *pH Sensors*

Task	Check
Ensure sensor is calibrated.	☐
Ensure the pH reading displayed locally at the Walchem panel is transmitted correctly to PLC.	☐

3.2.7 *Geotube*

Task	Check
Ensure surface is clean of sediment and debris.	☐
Ensure all inlet valve are open.	☐
Ensure height of geotube does not exceed manufacturer recommended limit.	☐

4.0 OPERATION

4.1 General Operating Instructions

Operation of the WTP will consist of ensuring major equipment (blowers, dosing pumps, motorized valves, level transmitters) is running correctly, and ensuring influent/effluent monitoring and sampling are conducted on schedule.

The drivers for pH adjustment and TSS treatment are operation of the Ferric Sulfate, Hydrated Lime and Polymer Pump, along with the proper performance of the aeration blowers and diffusers equipment.

The unit will run manually. During short term dormancy, the unit can be operated in a “Sleep Mode” where the system is run in a re-cycle status using two submersible pumps inside TA-130 and TA-230 to recirculate water from the end of each train to the beginning of each train. Chemical injection is disabled during dormancy, however, the lime mixer should remain on to maintain suspension of the hydrated lime slurry. Blowers will also remain on to ensure suspension of solids within the reactor tanks.

Parameters to be measured and recorded daily include temperature, pH (typical values are between 6.5 and 9), and TSS. The system must be monitored regularly to ensure pH does not drop below the low level set point or raise above the level set point.

The pH reading should be recorded daily. The pH should be cross referenced regularly with a hand held device. Should the pH differ from the hand held reading, the operator should clean the pH electrodes using a 2-5% solution of hydrochloric acid.

System data can be recorded in the spreadsheet provided in Appendix B. Regular daily monitoring of parameters such as pH, temperature, TSS, and Geotube height must be recorded to ensure proper operation.

4.2 Operating Procedure

The following section will outline the step-by-step procedures for operating the treatment system.

4.2.1 *Standard Operation*

Inlet

The inlet pond level should be checked and recorded prior to start up. Two pond pumps can be utilized to transfer raw water to the treatment system. Usage will depend on the volume of treatment required. At low pond levels, one pond pump and one process train can be utilized. At high levels, both pumps can be utilized to increase the treatment volume.

All pump discharge valves must be opened. The pumps (PU-100 A/B) shall be placed in “Hand” at the PLC. This will energize the pumps and begin transfer of water to the treatment system. The pumps will only turn on if a high level is measured by LSH-110/210 or LT-130/230.

Operators must ensure the inlet pond level is monitored, as the pumps do not include a low level shut off.

Ferric Pumps (PU-010 A/B)

Water is transferred from the inlet pond to two reactor tanks (TA-110 and TA-210) where ferric sulphate is injected. The dosage rate of the ferric pumps is determined by the inlet quality of the raw water and can range from 0 to 20 mg/l. The dosage rate is to be determined by the operator.

The dosage rate must be set manually at the pump. Once set, the pump can be set to “Auto” at the control panel. The ferric pumps, PU-010 A and PU-010 B, will energize when flow is detected by FIT-100 and FIT-200 respectively.

Before starting the pumps, all discharge valves must be opened.

Lime Pump (PU-020)

After coagulant addition, water flows by gravity to TA-120 and TA-220 where hydrated lime is injected into the process. The dosage rate of the Lime pump is determined by the inlet quality of raw water and the pH required, and can range from 0 to 300 mg/l. The dosage rate is to be determined by the operator.

In manual mode, the speed of the pump can be set at the pump VFD, located on the lime pump stand.

Pump speed will be dependent on the pH measured by pH-120, and the pH set point entered into the panel (adjustable by an operator). At a setpoint of 8.5, the pump will increase speed if pH-120 measures a pH below 8. If pH-120 measures a pH above 9, pump speed will decrease. If pH is measured between 8 to 8.5, the dosage rate will remain the same.

-

At a pH above 9.5, MV-120 and MV-220 will close.

The lime pump will operate continuously, with chemical consistently recirculated to the lime mixing tank (TA-020). This is done to ensure the lime slurry does not settle and solidify in the piping system. At the end of every shift, clean water must be flushed through the piping in order to prevent fouling. Flushing may be required more frequently depending on operational conditions.

Due to the possibility of fouling, the lime pump system must be monitored for pressure consistently.

Lime Solution Make Up

Hydrated lime solution is made manually, with the solution concentration ranging from 5-10% depending on volume of raw water to be treated. A concentration of 5% is recommended to minimize line fouling caused by the lime slurry. Higher concentrations can be made, but more frequent line flushing will be required.

The lime tank mixer is operated from the panel, and should be operated continuously to prevent the slurry from solidifying.

Polymer Pumps (PU-030 A/B)

The dosage rate of the ferric pumps is determined by the inlet quality and can range from 0 to 3 mg/l.

The dosage rate must be set manually at the pump. Once set, the pump can be set to “Auto” at the control panel. The polymer pumps, PU-020 A and PU-020 B, will energize when the transfer pumps, PU-200 A and PU-200 B are energized.

Before starting the pumps, all discharge valves must be opened.

Polymer Solution Make Up

Polymer solution is made manually, with concentration ranging from 0.1 to 0.25% depending on volume to be treated.

The polymer tank mixer is operated from the panel, and should be kept on at all times to maintain uniformity of the solution.

Blowers

The blowers are operated from the panel, and should be energized at all times when raw water is being processed in the reactor tanks.

Both blowers (BL-100A and BL-100B) can be set in “Auto” at the panel, at which point they will run continuously until the water level in TA-130 and TA-230 is measured to be less than 6”. This level is settable at the panel.

Raw Water Bag Filter

The bag filter provides filtration of water required for chemical makeup. The filter bags should be replaced periodically when differential pressure across the filter exceeds approximately 20 psi.

Geotube Bags

Water is transferred from the final reactor tanks (TA-130 and TA-230) by diesel generated trash pumps (PU-200 A and PU-200 B) to the geotube pond. The transfer pumps, PU-200A and PU-200B are operated based on the level measured by the reactor tank level transmitters, LT-130 and LT-230 respectively. These set points are adjustable at the panel.

The height of the geotube bags must be monitored regularly.

4.3 Daily Operator Checklist

The following steps outline day-to-day operational procedures for the WTS.

Standard Operation

Task	Check
Check inlet pond and record water level	☐
Check lime and polymer solutions, make up additional solution as required.	☐
Place PU-100 A (and PU-100 B if necessary) in Hand mode at the control panel.	☐
Set Ferric Sulphate pump (PU-010 A / B) dose rate and place pump in Auto at control panel. Ensure pump energizes when flow is detected by FIT-100 or FIT-200.	☐
Turn on hydrated lime pump (PU-020 A) manually. Adjust dose rate based on flow measured by inlet flow meters.	☐
Monitor hydrated lime pump pressure gauge. If pressure gauge is showing a pressure greater than 15 psi, flush line with water.	☐
Set polymer pump dose rate at panel. Set in “remote” mode. Set pump to auto at panel. Pump will turn on when PU-200A/B energize.	☐
Set Blowers (BL-100 A / BL-100B) to Hand.	☐
Once onion tanks are full, set PU-200A/B to Auto (if using both trains). Ensure downstream valves to geotube bags are open.	☐

Observe reactor tank water levels to ensure inlet and outlet flows are balanced.	☐
Observe and record height of geotube bags. Height must not exceed 6 feet.	☐
Set PU-300 to auto in the panel. Once the water in the pond reaches the operating float switch, the pump will be energized.	☐
Discharge vales must be set manually to allow for discharge to the creek, or recycle back to the inlet pond. Set valves in correct position.	☐

Daily Shutdown

Task	**Check**
Set inlet pump to Off position	
Allow reactor tanks to be pumped down to ¼ volume.	☐
Turn off chemical pumps.	☐
Flush lime line with water	☐
Keep lime mixer (Mix-020) on to ensure hydrated lime slurry remains in liquid form.	☐
If tanks are lowered, blowers can be turned off. If tanks are kept full, energize recirculation pumps.	☐
Check lime and polymer solutions, make up additional solution if required.	☐
Turn transfer pumps (PU-200 A/B) and discharge diesel pump (PU-300) off.	☐

APPENDIX A –DRAWINGS



NOTES:

PU-200A/B- Transfer Pump
PU-300- Discharge Pump
FT-300- Flow Meter
LS- Level Switch
-LSHH 200
-LSH 200
-LSL 200

Process lines
Instrumentation lines

Process based on conceptual desgin by Golder Associates

REVISION TABLE

No.	DESCRIPTION	DATE
0	Original Issue	2018/04/30
1	Record Drawing	2018/07/31

McCUE ENGINEERING CONTRACTORS

CLIENT:

BAFFINLAND IRON MINES CORPORATION

FULL SITE LAYOUT
GENERAL ARRANGEMENT DRAWING
Waste Rock Pile Water Treatment Plant

DATE: July 31, 2018	SCALE: NTS
DATA BY: R.B.	MCCUE JOB NO: 137-0001
DRAWN BY: L.S	FIG: GA-001

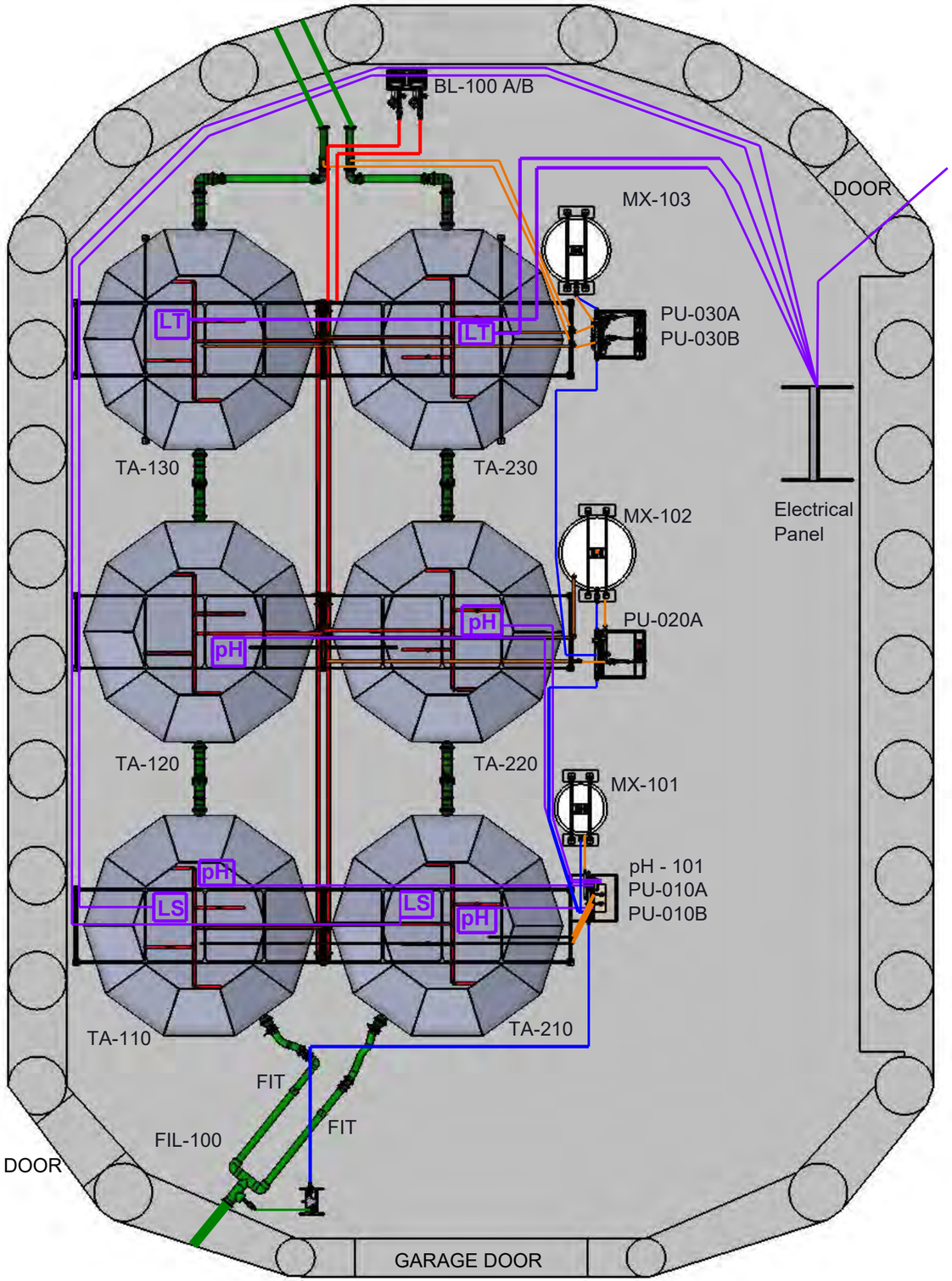

LEGEND

BL-100 A/B - Blower
FIL-100 - Bag Filter
MX-101 - Ferric Mixing Station
MX-102 - Lime Mixing Station
MX-103 - Polymer Mixing Station
PU-010 A/B - Ferric Pump
PU-020 - Lime Pump
PU-030 A/B - Polymer Pump
TA-110 - Ferric Process Tank (Train 1)
TA-210 - Ferric Process Tank (Train 2)
TA-120 - Lime Process Tank (Train 1)
TA-220 - Lime Process Tank (Train 2)
TA-130 - Polymer Process Tank (Train 1)
TA-230 - Polymer Process Tank (Train 2)
pH-101 - pH Controller
FIT - Flow Meter
pH - pH Sensor
LS - Level Switch
LT - Level Transmiter

Notes:

- Process Lines
- Water Make-up Lines
- Chemical Lines
- Air Lines
- Instrumentation Line

Process based on conceptual design by Golder Associates

REVISION TABLE		
No.	DESCRIPTION	DATE
0	Original Issue	2018/05/01
1	Record Drawing	2018/08/17

McCUE ENGINEERING CONTRATORS

CLIENT:

BAFFINLAND IRON MINES CORPORATION

BUILDING LAYOUT
GENERAL ARRANGEMENT DRAWING
Waste Rock Pile Water Treatment Plant

DATE: August 17, 2018	SCALE: AS SHOWN
DATA BY: R.B	JOB NO: 137-0001
DRAWN BY: L.S	FIG: GA-002

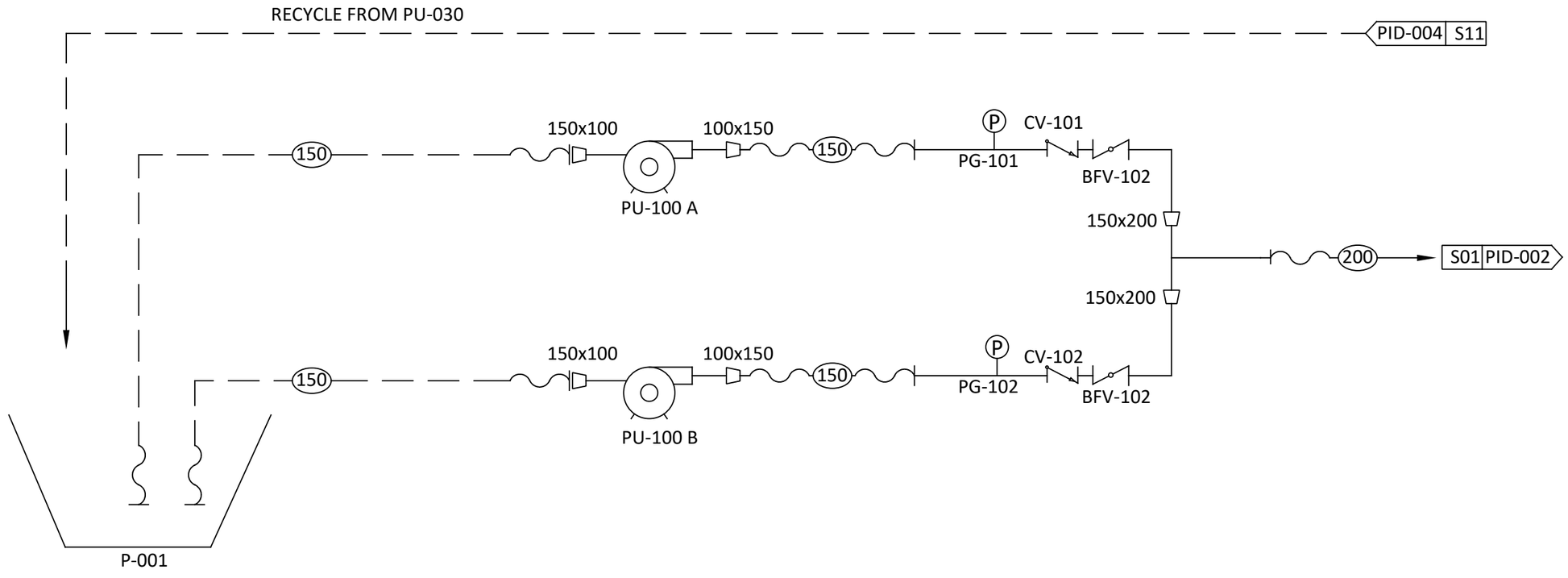

P-001
Inlet Storage Pond

PU-100 A/B
Pond Transfer Pump
Model: Prime Aire PA4A60-404ST
Power: Diesel Driven
Capacity: 140m³/hr

LEGEND :

- Hose
- Sch. 80 PVC Pipe
- Butterfly Valve
- Check Valve
- Reducer
- Pressure Gauge

Process based on conceptual design by Golder Associates

NO.	REVISION TABLE	DATE
0	Original Issue	April 30, 2018
1	Record Drawing	July 31, 2018

McCUE ENGINEERING CONTRACTORS

CLIENT:

BAFFINLAND IRON MINES CORPORATION

Waste Rock Water Storage Pond
PROCESS & INSTRUMENTATION DIAGRAM
Waste Rock Pile Treatment Plant

DATE: July 31, 2018	SCALE: NTS
DATA BY: R.B.	MCCUE JOB NO: 137-0001
DRAWN BY: M.T.	FIG: PID-0001

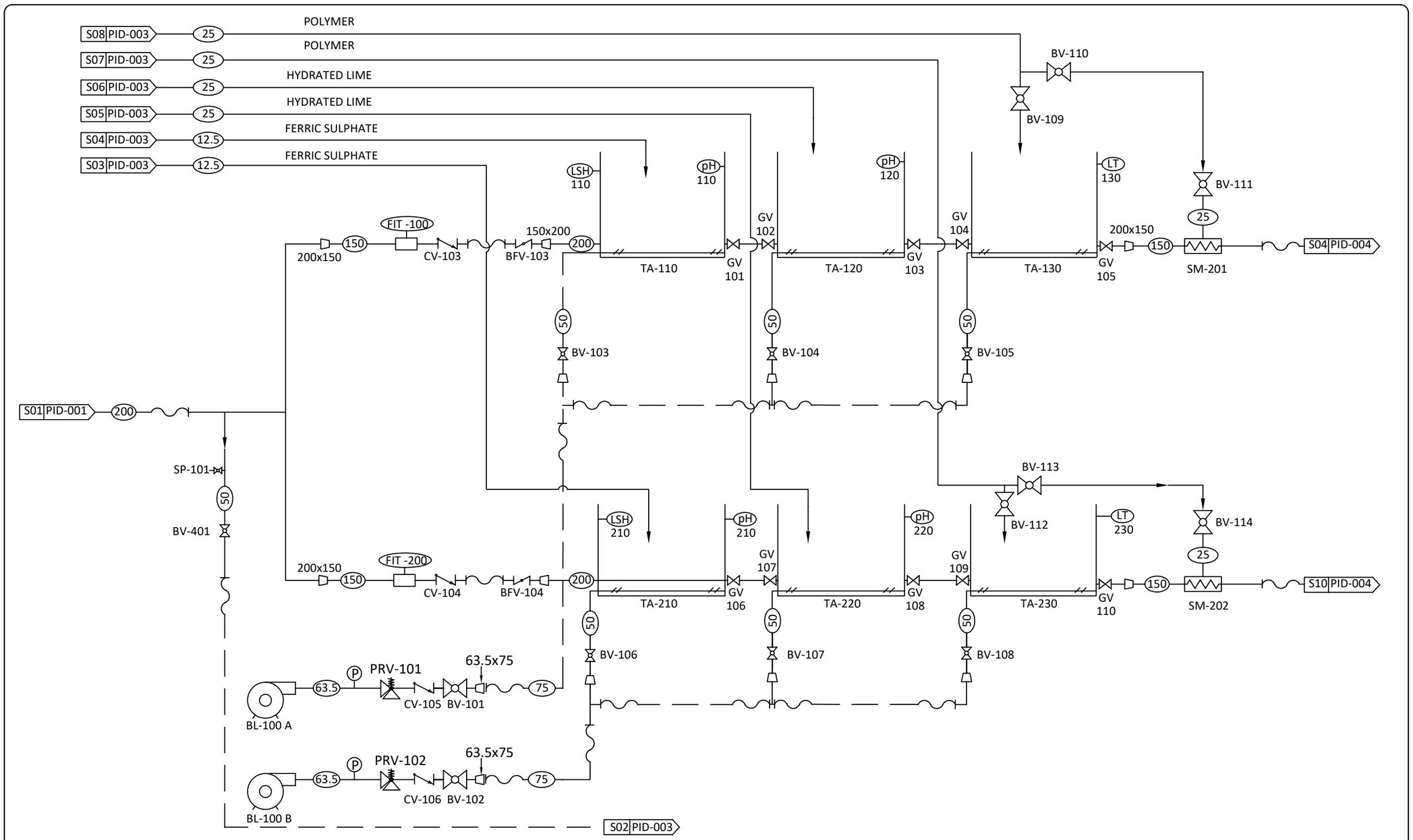

BL-100 A/B
Blower
Model: Gast R7100A-3
Power: 208V/3hp/60Hz
Capacity: 500m³/hr @ 1.9m TDH

TA-110/210
Ferric Reaction Tank
Material: Polyurethane
Size: 5.9m W x 1.5 H
Capacity: 24,820 Liters

TA-120/220
Lime Reaction Tank
Material: Polyurethane
Size: 5.9m W x 1.5 H
Capacity: 24,820 Liters

TA-130/230
Polymer Reaction Tank
Material: Polyurethane
Size: 5.9m W x 1.5 H
Capacity: 24,820 Liters

FT-100/200
Influent Flow Meter
Model: GF Signet 3-2551-P1-41

LT-130/230
Level Transmitter
Model: Echosonic 11 LU27

pH-110/120/210/220
pH Meter
Model: Walchem WEL-PHF-NN

LEGEND:

- Hose
- Sch. 80 PVC Pipe
- Butterfly Valve
- Check Valve
- Reducer
- Pressure Gauge
- Static Mixer
- Gate Valve
- Pressure Relief Valve
- Ball Valve
- Sample Port
- Flow Meter
- Level Switch
- pH Sensor
- Level Transmitter

Process based on conceptual design by Golder Associates

NO.	REVISION TABLE	DATE
0	Original Issue	April 30, 2018
1	Record Drawing	July 31, 2018

McCUE ENGINEERING CONTRACTORS

CLIENT:

BAFFINLAND IRON MINES CORPORATION

REACTION TANKS
PROCESS & INSTRUMENTATION DIAGRAM
Waste Rock Pile Water Treatment Plant

DATE: July 31, 2018	SCALE: NTS
DATA BY: R.B.	MCCUE JOB NO: 137-0001
DRAWN BY: M.T.	FIG: PID-0002

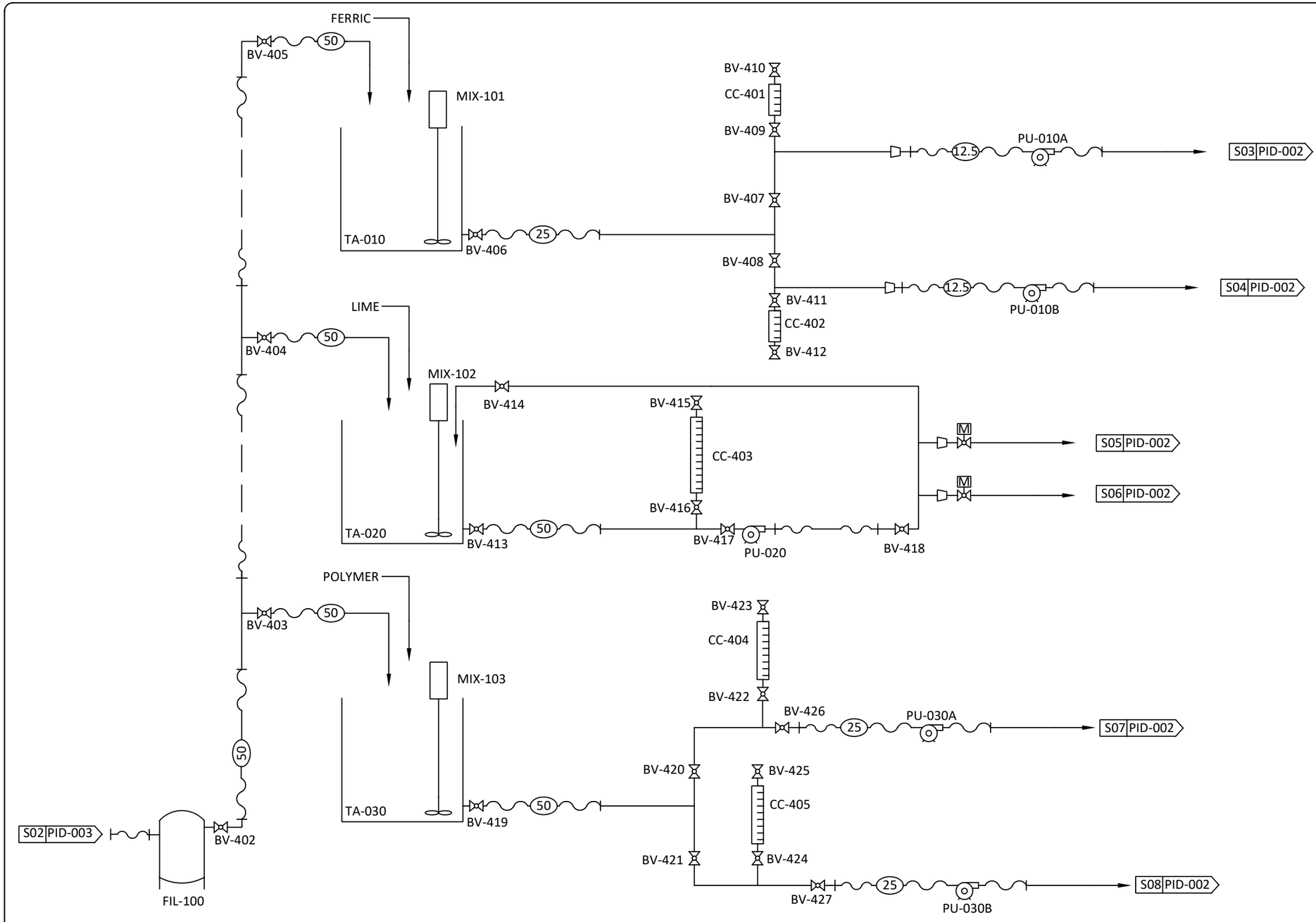

LEGEND:

- Hose
- Sch. 80 PVC Pipe
- Ball Valve
- Reducer
- Motorized Ball Valve

Process based on conceptual design by Golder Associates

NO.	REVISION TABLE	DATE
0	Original Issue	April 30, 2018
1	Record Drawing	July 31, 2018

McCUE ENGINEERING CONTRACTORS

CLIENT:

BAFFINLAND IRON MINES CORPORATION

CHEMICAL MAKEUP
PROCESS & INSTRUMENTATION DIAGRAM
Waste Rock Pile Water Treatment Plant

DATE: July 31, 2018	SCALE: NTS
DATA BY: R.B.	MCCUE JOB NO: 137-0001
DRAWN BY: M.T.	FIG: PID-003

FIL-100
Bag Filter
Model: FTI 830-2P-150-CS-BS-P13-DP
Bag Size: 5 Micron

PU-010A/B
Ferric Chemical Pump
Model: Welchmen EHE31E1-VC
Power: 115 VAC/1hp/60Hz
Capacity: 21 LPM @ 106m TDH

PU-020
Lime Chemical Pump
Model: Flowmotion FR25-HR30HR
Power: 230V/3hp/60Hz
Capacity: 570 LPM @ 42m TDH

PU-030
Polymer Chemical Pump
Model: Flowmotion FR25-HR30HR
Power: 230V/3hp/60Hz
Capacity: 990 LPM @ 42m TDH

MIX-101
Ferric Mixer
Model: Dynamix DMX-5505K-1
Power: 0.5 HP, 230V/1Ph/60Hz
Shaft: 1" Diameter x 41" Long

MIX-102
Lime Mixer
Model: Dynamix DMX-5505K-2
Power: 0.5 HP, 230V/1Ph/60Hz
Shaft: 1" Diameter x 52" Long

MIX-103
Polymer Mixer
Model: Dynamix DMX-5505K-1
Power: 0.5 HP, 230V/1Ph/60Hz
Shaft: 1" Diameter x 49" Long

TA-010
Ferric Mixing Tank
Material: Polyurethane
Size: Ø 1.2m x 1.3m Height

TA-020
Lime Mixing Tank
Material: Polyurethane
Size: Ø 1.8m x 1.7m Height

TA-030
Polymer Mixing Tank
Material: Polyurethane
Size: Ø 1.6m x 1.6m Height

CC-401/402/403/404/405
Calibration Column

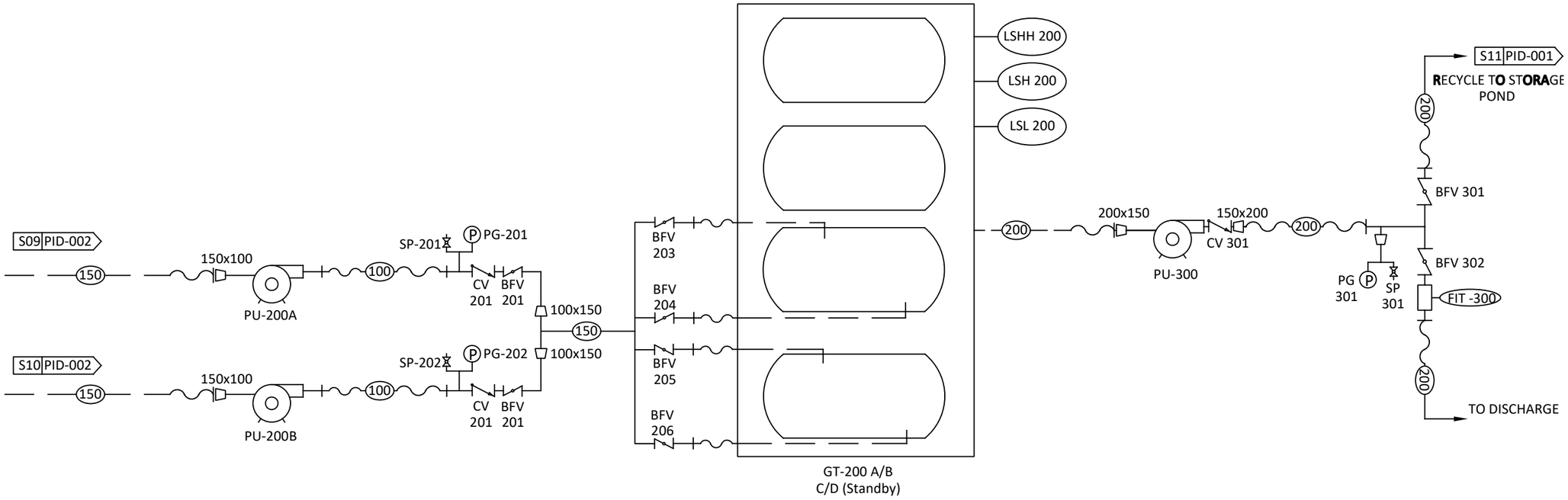

PU-200A/B
Transfer Pump
Model: Prime Aire PA4A60-404ST
Power: Diesel Driven
Capacity: 140m³/hr

GT-200 A/B/C/D
Geotube
Model: Tencare GT500
Dimensions: 60' Circumference x 100' Long

PU-300
Discharge Pump
Model: Prime Aire PA4A60-404ST
Power: Diesel Driven
Capacity: 280m³/hr

FT-300
Flow Meter
Model: Toshiba GFG32

LEGEND:

- Hose
- Sch. 80 PVC Pipe
- Butterfly Valve
- Check Valve
- Reducer
- Pressure Gauge
- Sample Port
- Level Switch

Process based on conceptual design by Golder Associates

NO.	REVISION TABLE	DATE
0	Original Issue	April 30, 2018
1	Record Drawing	July 31, 2018

McCUE ENGINEERING CONTRACTORS

CLIENT:

BAFFINLAND IRON MINES CORPORATION

GEOTUBE FIELD PROCESS & INSTRUMENTATION DIAGRAM

Waste Rock Pile Water Treatment Plant

DATE: July 31, 2018	SCALE: NTS
DATA BY: R.B.	MCCUE JOB NO: 137-0001
DRAWN BY: M.T.	FIG: PID-004

APPENDIX B - MONITORING

McCUE ENGINEERING CONTRACTORS EST. 2000

BROWNFIELDS TO GOLD MINES

Monitoring Spreadsheet

Project Name: BaffinLand Iron Mine
Waste Pile Water Treatment

Date	Time	OP	Inlet Quality			Train 1						Train 2						Discharge							
			Temp ºC	Inlet pH	Inlet TSS mg/L	FIT-100 (L/s)	pH-110	pH-120	Ferric Dosage Stroke/Speed	Lime Dosage Hz	Polymer Dosage Hz	FIT-200 (L/s)	pH-210	pH-220	Ferric Dosage Stroke/Speed	Lime Dosage Hz	Polymer Dosage Hz	FIT-300 (gpm)	FIT-300 Totalizer (gpm)	Geotube Pond pH	Geobag 1 Height (m)	Geobag 2 Height (m)	Discharge pH	Discharge Turbidity NTU	Discharge TSS (mg/L)